FED.RD. DIV.NO.	PROJECT NO.		SHEET NO.
6			1
STATE	STATE DIST.	COUNTY	
TEXAS	SAT	COMAL	
CONT.	SECT.	JOB	HIGHWAY NO.
0915	17	076	COMMON

STATE OF TEXAS
DEPARTMENT OF TRANSPORTATION

INDEX OF SHEETS

SEE SHEET 2 FOR INDEX OF SHEETS

PLANS OF PROPOSED
COMMON STREET PEDESTRIAN IMPROVEMENTS

DESIGN SPEED = 30 MPH
AREA OF DISTURBED SOIL = 3 ACRES
ADT: 12,400

ACCESSIBILITY STANDARDS = PROWAG

REGISTERED ACCESSIBILITY SPECIALIST
INSPECTION REQUIRED
TDLR NO. TABS2024010813

PROJECT NO. NB 22-197
CSJ: 0915-17-076
COMAL COUNTY
COMMON STREET

LIMITS FROM: COMMON ST AT NORTH LIBERTY AVE (STA: 0+00)
TO: COMMON ST AT LOOP 337 (STA: 67+50)

NET LENGTH OF ROADWAY = 6,750 FT = 1.278 MI
NET LENGTH OF BRIDGE = 0 FT = 0 MI

FOR WORK CONSISTING OF REMOVAL OF EXISTING 4-FT WIDE SIDEWALKS, INSTALLATION OF NEW 6-FT WIDE SIDEWALKS, ADA RAMPS, CROSSWALKS, AND UTILITY ADJUSTMENTS, ETC.

STATE OF TEXAS
ASHISH GHOSH
111103
LICENSED
PROFESSIONAL ENGINEER
2/13/2024

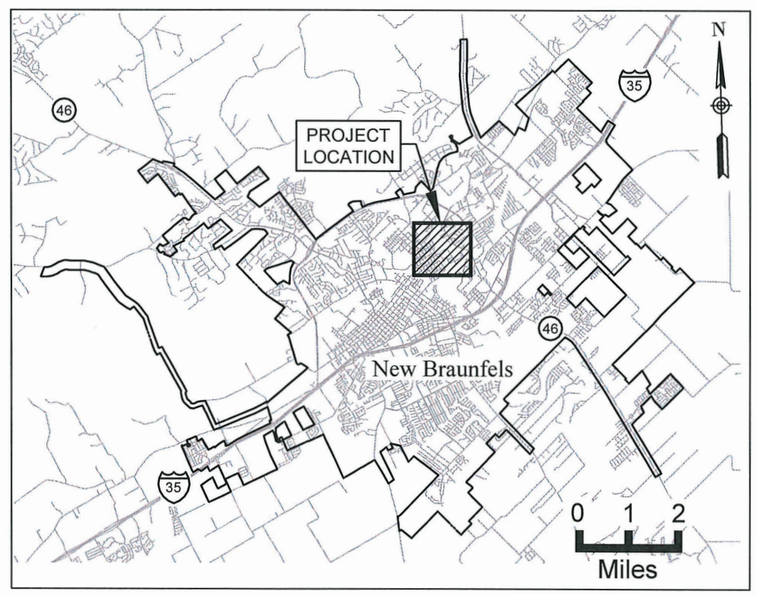

LOCATION MAP

LETTING DATE: _____

DATE CONTRACTOR BEGAN WORK: _____

DATE WORK WAS ACCEPTED: _____

FINAL CONTRACT COST: $ _____

CONTRACTOR: _____

FINAL PLANS STATEMENT:

THE CONSTRUCTION WORK WAS PERFORMED
IN ACCORDANCE WITH THE PLANS.

AREA ENGINEER _____ P.E. _____ DATE

TEXAS DEPARTMENT OF TRANSPORTATION

CONCURRENCE 2/19/2024
CITY OF NEW BRAUNFELS

FILE LOCATION AND NAME
W:\00_TGC PROJECT FILES\NBR100\CAD\NBR100_GENERAL.DWG, 2/12/2024 4:05 PM

LEVELS DISPLAYED
1

COUNTY COMAL PROJ. NO.
HWY. NO. COMMON LETTING DATE 4/26/24
DATE ACCEPTED

SPECIFICATIONS ADOPTED BY THE TEXAS DEPARTMENT OF TRANSPORTATION, NOVEMBER 1, 2014 AND THE SPECIFICATION ITEMS LISTED AND DATED AS FOLLOWS, SHALL GOVERN ON THIS PROJECT: SPECIAL LABOR PROVISIONS FOR STATE PROJECTS (000--008)

EXCEPTIONS: SIDEWALK SLOPE EXCEEDS 5% AT BRIDGE APPROACHES ON BOTH SIDES DUE TO STEEP TERRAIN.

EQUATIONS: NONE

R.R. CROSSINGS: 0

© 2023 by Texas Department of Transportation; all rights reserved.

SUBMITTED FOR LETTING
TRANSPORTATION ENGINEER SUPERVISOR

RECOMMENDED FOR LETTING
DIRECTOR OF TRANSPORTATION PLANNING & DEVELOPMENT

REVIEWED FOR LETTING
TRANSPORTATION ENGINEER SUPERVISOR

APPROVED FOR LETTING
DISTRICT ENGINEER

INDEX OF SHEETS

SHEET NO.	DESCRIPTION
I. GENERAL	
1	COVER SHEET
2	INDEX OF SHEETS
3	GENERAL NOTES
4	TYPICAL SECTIONS
5	SUMMARY OF QUANTITIES
II. TRAFFIC CONTROL PLAN	
6	TRAFFIC CONTROL PLAN NARRATIVE
7	TRAFFIC CONTROL PLAN PEDESTRIAN DETOURS
8	TRAFFIC CONTROL PLAN ADVANCED WARNING DEVICES
9	TRAFFIC CONTROL PLAN LANE CLOSURES
10	SCHEDULE OF BARRICADES AND ADVANCE WARNING DEVICES
III. TRAFFIC CONTROL PLAN - STANDARDS	
11-22	*BC(1)-21 THRU *BC(12)-21
23	*TCP(1-1)-18
24	*TCP(1-4)-18
25	*TCP(2-2)-18
26	*WZ(RCD)-13
IV. ROADWAY DETAILS	
27	MISCELLANEOUS DETAILS 1
V. COMMON ST	
28	OVERALL CONTROL MAP
29	CONTROL DETAIL 1-7
30	DEMOLITION & SWPPP PLAN 1
31	DEMOLITION & SWPPP PLAN 2
32	DEMOLITION & SWPPP PLAN 3
33	DEMOLITION & SWPPP PLAN 4
34	DEMOLITION & SWPPP PLAN 5
35	DEMOLITION & SWPPP PLAN 6
36	DEMOLITION & SWPPP PLAN 7
37	DEMOLITION & SWPPP PLAN 8
38	SIDEWALK PLAN 1
39	SIDEWALK PLAN 2
40	SIDEWALK PLAN 3
41	SIDEWALK PLAN 4
42	SIDEWALK PLAN 5
43	SIDEWALK PLAN 6
44	SIDEWALK PLAN 7
45	SIDEWALK PLAN 8
VI. ROADWAY/TRAFFIC - STANDARDS	
46-49	*PED-18
50	*SIDEWALK DETAILS
51	*DRIVEWAY DETAILS 1
52	*DRIVEWAY DETAILS 2
53	*DRIVEWAY DETAILS 3
54-55	*MISCELLANEOUS CURB AND SIDEWALK DETAILS 1
56	*CCCG-22
57-59	*PRD-13 1
60-63	*PM(1)-20 THRU *PM(4)-20
64	*SMD(GEN)-08
65	*SMD (SLIP-1)-08
66	*SMD (SLIP-2)-08
67	*SMD (SLIP-3)-08
68	*TCD-05
VII. TRAFFIC SIGNAL LAYOUT AND DESIGN TABLE	
69	TRAFFIC SIGNAL PROPOSED LAYOUT
70	TRAFFIC SIGNAL DESIGN TABLES
71	TRAFFIC SIGNAL ELEVATIONS
VIII. TRAFFIC SIGNAL AND ELECTRICAL DETAILS AND NOTES	
72	*ED(1)-14
73	*ED(3)-14
74	*ED(4)-14
75	*ED(5)-14
76	*ED(6)-14
77	*ED(8)-14
78	*ED(9)-14
79	*LUM-A-12
80	*MA-C-12
81	*MA-D-12
82	*SMA-80(1)-12
83	*SMA-80(2)-12
84	*TS-CF-21
85	*TS-FD-12
86	*WZ(BTS-1)-13
87	*WZ(BTS-2)-13
IX. DRAINAGE DETAILS	
88	DRAINAGE CHANNEL CROSSING DETAIL
X. ENVIRONMENTAL	
89	EPIC
90-91	SWP3
92	*EC(1)-16
93-95	*EC(9)-16
96	TREE PROTECTION - SAN ANTONIO DISTRICT STANDARD
97	TREE PRUNING AND REMOVAL - SAN ANTONIO DISTRICT STANDARD

THE STANDARD SHEETS SPECIFICALLY SHOWN WITH PRECEEDING (*), HAVE BEEN SELECTED BY ME OR UNDER MY RESPONSIBLE SUPERVISION AS BEING APPLICABLE TO THIS PROJECT.

REV	DESCRIPTION	DATE	APPR
0	ISSUED FOR BID	02/12/24	AG

INDEX OF SHEETS

COMMON STREET PEDESTRIAN IMPROVEMENTS

CITY OF NEW BRAUNFELS
550 Landa Street | New Braunfels, TX 78130

DESIGN BY: KM
DRAWN BY: EFC
CHECKED BY: JB
APPROVED BY: AG

City of New Braunfels

ENGINEER:
THE GOODMAN CORPORATION
3200 TRAVIS, SUITE 200
HOUSTON, TEXAS 77006
www.TheGoodmanCorp.com
(713) 951-7951
TBPELS Firm Registration No. 19990

SURVEYOR:
MBCO ENGINEERING + SURVEYING

STATE OF TEXAS
ASHISH GHOSH
111103
LICENSED
PROFESSIONAL ENGINEER
2/13/2024

DATE: 02/12/2024
SCALE: N/A

W:\00_TGC Project Files\NBR100\CAD\NBR100_GENERAL.dwg, 2/12/2024

CITY OF NEW BRAUNFELS GENERAL NOTES (REVISED MARCH 2023)

GENERAL

1. ALL WORK SHALL CONFORM TO THE TEXAS DEPARTMENT OF TRANSPORTATION (TxDOT) STANDARD SPECIFICATIONS FOR CONSTRUCTION AND MAINTENANCE OF HIGHWAYS, STREETS, AND BRIDGES, NOVEMBER 2014, AND THE CITY OF NEW BRAUNFELS DETAILS AND STANDARDS.
2. ALL WORK SHALL BE PERFORMED IN ACCORDANCE WITH ALL APPLICABLE FEDERAL, STATE, AND LOCAL LAWS, REGULATIONS, AND ORDINANCES.
3. THE CONTRACTOR SHALL ALWAYS MAINTAIN A COPY OF THE LATEST CONTRACT CONSTRUCTION PLANS AND SPECIFICATIONS ON-SITE.
4. THE CONTRACTOR SHALL OBTAIN ALL PERMITS AND INSPECTIONS REQUIRED TO COMPLETE THE WORK (NO SEPARATE PAY ITEM).
5. THE CONTRACTOR SHALL PROVIDE AN EMERGENCY TELEPHONE NUMBER FOR EVENINGS, WEEKENDS, AND HOLIDAYS BEFORE CONSTRUCTION. THE CONTRACTOR SHALL RESPOND TO THE CITY WITHIN TWO HOURS OF THE INITIAL CONTACT.
6. THE CONTRACTOR'S PERSONNEL, INCLUDING SUBCONTRACTORS, SHALL ALWAYS WEAR IDENTIFYING CLOTHING OR HATS ON-SITE.
7. THE CONTRACTOR SHALL FIELD VERIFY AND PROTECT ALL EXISTING UTILITIES PRIOR TO CONSTRUCTION. THE CONTRACTOR SHALL COMPLY WITH TEXAS EXCAVATION LAWS, CONTACT TEXAS-811 72 HOURS BEFORE ANY WORK IN THE AREA, AND MAINTAIN CURRENT LOCATES THROUGHOUT THE PROJECT. THE CONTRACTOR SHALL COORDINATE ALL WORK INDIVIDUALLY WITH ADJACENT UTILITIES IN THE AREA, INCLUDING BUT NOT LIMITED TO: CENTERPOINT ENERGY (GAS), NBU ELECTRIC, NBU WATER, AT&T COMMUNICATIONS, SPECTRUM CABLE, CITY PUBLIC WORKS DEPARTMENT, CITY FIRE DEPARTMENT, AND TxDOT.
8. THE CONTRACTOR SHALL PRESERVE ALL SURVEY MONUMENTS AND SITE MARKINGS PROVIDED. THE CONTRACTOR SHALL BE RESPONSIBLE FOR ALL CONSTRUCTION STAKING REQUIRED FOR THE SUCCESSFUL COMPLETION OF THE PROJECT.
9. THE CONTRACTOR SHALL VERIFY PROJECT ELEVATIONS. THE TERM "MATCH EXISTING" SHALL SIGNIFY BOTH HORIZONTAL AND VERTICAL ALIGNMENT.
10. THE CONTRACTOR SHALL PREPARE A CONSTRUCTION PHASING PLAN DETAILING LIMITS OF CONSTRUCTION FOR EACH PHASE. THE PHASING PLAN SHALL BE SUBMITTED TO THE CITY FOR APPROVAL PRIOR TO CONSTRUCTION. THE CONTRACTOR WILL NOT BE ALLOWED TO WORK OUT OF PHASE UNLESS WRITTEN APPROVAL HAS BEEN OBTAINED FROM THE CITY FOR THE PHASE CHANGE. THE PHASING PLAN SHALL INCLUDE TRAFFIC CONTROL AND HAUL ROUTES.
11. THE CONTRACTOR IS RESPONSIBLE FOR ALL SUBSIDIARY WORK AND THE MEANS AND METHODS NECESSARY TO COMPLETE THE PROJECT.
12. THE CONTRACTOR SHALL PROVIDE WRITTEN NOTIFICATION TO THE CITY AND DESIGN ENGINEER OF DISCREPANCIES BETWEEN THE CONSTRUCTION PLANS AND SPECIFICATIONS. THE MORE STRINGENT REQUIREMENTS SHALL GOVERN UNLESS OTHERWISE DIRECTED IN WRITING BY THE CITY.
13. THE CONTRACTOR SHALL PROVIDE WRITTEN NOTIFICATION TO THE CITY AND DESIGN ENGINEER OF DISCREPANCIES BETWEEN THE SITE CONDITIONS AND THE CONSTRUCTION PLANS PRIOR TO CONSTRUCTION. THE CONTRACTOR SHALL ASSUME FULL RESPONSIBILITY FOR ALL NECESSARY REVISIONS DUE TO FAILURE TO GIVE SUCH NOTIFICATION.

SITE:

1. THE CONTRACTOR SHALL ASSUME SOLE AND COMPLETE RESPONSIBILITY FOR JOB SITE CONDITIONS DURING THE CONSTRUCTION OF THE PROJECT, INCLUDING THE SECURITY AND SAFETY OF ALL PERSONS AND PROPERTY; THIS REQUIREMENT SHALL APPLY CONTINUOUSLY AND NOT BE LIMITED TO NORMAL WORKING HOURS.
2. THE CONTRACTOR SHALL KEEP ALL AREAS WITHIN AND ADJACENT TO CONSTRUCTION AREAS FREE FROM OVERGROWN VEGETATION AND ALL CONSTRUCTION DEBRIS AND BE SAFE FOR PEDESTRIAN AND VEHICLE TRAFFIC BEFORE, DURING, AND AFTER CONSTRUCTION.
3. THE CONTRACTOR SHALL IMPLEMENT BEST MANAGEMENT PRACTICES REGARDING DUST, DIRT, AND EROSION CONTROL. CONTRACTOR MAY BE RESPONSIBLE FOR ADDITIONAL MITIGATION UPON REQUEST OF OWNER. THE STREET PAVEMENT, DRIVEWAYS, SIDEWALKS, AND WALKWAYS WITHIN AND ADJACENT TO THE PROJECT SHALL BE SWEPT FREE OF MUD AND ALL DEBRIS REMOVED FROM THE WORK AREA DAILY.
4. THE CONTRACTOR SHALL INSTALL AND MAINTAIN THE PROJECT SIGN IN ACCORDANCE WITH CITY STANDARDS AND SPECIFICATIONS.
5. THE CONTRACTOR SHALL REMOVE, PROTECT, RELOCATE, OR REINSTALL ITEMS REQUESTED BY THE CITY AS DIRECTED BY THE OWNER.
6. THE CONTRACTOR SHALL REPAIR ANY DAMAGE CAUSED BY THE CONTRACTOR OUTSIDE OF THE DESIGNATED WORK AREA. ANY EXISTING OFF-SITE IMPROVEMENTS THAT ARE DAMAGED OR UNDERCUT BY THE CONTRACTOR'S OPERATIONS SHALL BE REPAIRED OR REPLACED AS DIRECTED BY THE ENGINEER AND APPROVED BY THE CITY THE EXISTING IMPROVEMENTS AT THE CONTRACTOR'S EXPENSE (NO SEPARATE PAY ITEM).
7. THE CONTRACTOR SHALL REMOVE ALL WASTE MATERIALS. THE CITY SHALL APPROVE THE LOCATION FOR THE DISPOSAL OF CONSTRUCTION MATERIALS PRIOR TO CONSTRUCTION. THE CONTRACTOR SHALL NOT PLACE ANY WASTE MATERIAL IN THE 100-YEAR FLOOD PLAIN. NO WASTE MATERIALS SHALL BE PLACED IN EXISTING LOWS THAT WILL BLOCK OR ALTER FLOW LIMITS OF EXISTING OR NATURAL DRAINAGE.
8. DRAINAGE IMPROVEMENTS SUFFICIENT TO MITIGATE THE IMPACT OF CONSTRUCTION SHALL BE INSTALLED PRIOR TO ADDING IMPERVIOUS COVER. ALL DRAINAGE IMPROVEMENTS SHALL BEGIN AT THE OUTFALL TO ENSURE POSITIVE DRAINAGE THROUGHOUT CONSTRUCTION.
9. THE CONTRACTOR SHALL MAINTAIN A SAFE, DRIVABLE SURFACE FREE FROM POTHOLES, RUTTING, AND HAZARDOUS CONDITIONS THROUGHOUT THE PROJECT.

EROSION CONTROL:

1. THE CONTRACTOR SHALL DEVELOP AND IMPLEMENT A STORMWATER POLLUTION PREVENTION PLAN (SW3P) AND SUBMIT IT TO THE CITY PRIOR TO CONSTRUCTION. THE SW3P SHALL INCLUDE ALL DISTURBED AREAS BY THE CONSTRUCTION, INCLUDING BORROW, STAGING, AND STORAGE AREAS. THE SW3P WITH REQUIRED INSPECTION REPORTS MUST BE KEPT UP TO DATE AND KEPT ON THE CONSTRUCTION SITE AT ALL TIMES. THE CONTRACTOR SHALL PREPARE A NOTICE OF INTENT (NOI) AND SECURE A PERMIT FROM TEXAS COMMISSION ON ENVIRONMENTAL QUALITY (TCEQ) FOR LARGE CONSTRUCTION SITES OF 5 OR MORE ACRES OF DISTURBED AREA WITH A COPY OF THE NOI AND THE REQUIRED CONSTRUCTION SITE NOTICE POSTED AT THE CONSTRUCTION ENTRANCE IN CLEAR VIEW OF THE PUBLIC DURING THE CONSTRUCTION. FOR LARGE CONSTRUCTION SITES, AFTER THE SITE IS 70% OR GREATER STABILIZED SO THAT THERE IS NO FURTHER DANGER OF EROSION AND SEDIMENTATION POLLUTION FROM THE SITE DISTURBED AREAS, THE CONTRACTOR MUST PREPARE AND SUBMIT A NOTICE OF TERMINATION (NOT) TO TCEQ. A COPY OF THE NOI AND NOT MUST BE SUBMITTED TO THE CITY FOR EACH PROJECT. SEE TCEQ REGULATIONS FOR SW3P REQUIREMENTS.
2. ALL EROSION CONTROL MEASURES SHALL BE IN PLACE PRIOR TO ANY CONSTRUCTION ACTIVITIES. THE EROSION CONTROL MEASURES SHALL REMAIN IN PLACE AND FUNCTIONAL UNTIL AFTER THE PROPOSED IMPROVEMENTS ARE IN PLACE AND VEGETATION IS ESTABLISHED. THE CONTRACTOR IS ULTIMATELY RESPONSIBLE FOR EFFECTIVELY CONTROLLING EROSION AND SEDIMENTATION.
3. ADJUSTMENTS AND REPAIRS TO THE EROSION CONTROL DEVICES SHALL BE MADE AS NEEDED AT THE CONTRACTOR'S EXPENSE.
4. STABILIZED CONSTRUCTION AREA SHALL BE CONSTRUCTED OF 3 IN X 5 IN ROCK TO BE PLACED AT A MINIMUM LENGTH OF 25 FT AND MAINTAINED SO THAT CONSTRUCTION DEBRIS DOES NOT FALL WITHIN THE CITY RIGHT-OF-WAY. THE RIGHT-OF-WAY MUST BE CLEARED OF MUD, ROCKS, DUST, ETC., AT ALL TIMES.
5. SEED/SOD SHALL BE FURNISHED TO ESTABLISH GROUND COVER OVER ALL DISTURBED AREAS AS REQUIRED BY THE CONTRACT DOCUMENTS. THE CONTRACTOR SHALL NOT WAIT UNTIL THE COMPLETION OF THE ENTIRE PROJECT BEFORE DOING THIS WORK. THE PROJECT SHALL NOT BE CONSIDERED FOR ACCEPTANCE BY THE CITY UNLESS THE ESTABLISHMENT OF 80% GROUND COVER IS ENSURED. SEEDING TO ESTABLISH VEGETATION WITHIN CONSTRUCTED EARTHEN CHANNELS, BASINS AND DISTURBED AREAS SHALL BE CONDUCTED PER ITEM 164 (SEEDING FOR EROSION CONTROL OF TxDOT'S STANDARD SPECIFICATIONS). ONLY SEED TYPES AND MIXES SPECIFIED FOR THE SAN ANTONIO DISTRICT (DISTRICT 15) IN TABLES 1 AND 2 UNDER ITEM 164 SHALL BE UTILIZED. DURING THE COOL SEASON (SEPT 1-NOV 30), CEREAL RYE AND SEED SPECIES SPECIFIED FOR THE SAN ANTONIO DISTRICT IN TABLE 3 MAY BE USED.
6. IT MAY BE DEEMED NECESSARY TO INCORPORATE TOPSOIL AND SOIL AMENDMENTS (I.E., COMPOST/ FERTILIZER) INTO EXISTING SOIL IN ORDER TO FACILITATE VEGETATION GROWTH. TOPSOIL, COMPOST, AND FERTILIZER ADDITIONS SHALL BE CONDUCTED ACCORDING TO ITEMS 160, 161 AND 166 OF TxDOT'S STANDARD SPECIFICATIONS.
7. AREAS REQUIRING PERMANENT VEGETATION (EARTHEN CHANNELS, PONDS, ETC.) ARE REQUIRED TO MEET ITEM 160 OF TxDOT'S STANDARD SPECIFICATIONS. TESTING PER TEX-128-E MAY BE REQUIRED AT THE CITY'S REQUEST.
8. WATERING MAY BE NECESSARY TO FACILITATE AND EXPEDITE THE SPROUTING AND GROWTH OF VEGETATION. ITEM 168 OF TxDOT'S STANDARD SPECIFICATIONS SHALL BE ADHERED TO FOR VEGETATIVE WATERING.
9. IF EXTENDED DROUGHT CONDITIONS EXIST THAT HINDER OR PROHIBIT THE GROWTH AND ESTABLISHMENT OF VEGETATION, THE CONTRACTOR SHALL PROVIDE A PLAN TO THE CITY DESCRIBING THE MEASURES THAT WILL BE TAKEN TO STABILIZE EARTHEN DRAINAGE INFRASTRUCTURE UNTIL A TIME WHEN GROWING CONDITIONS BECOME MORE FAVORABLE.

TRAFFIC:

1. THE CONTRACTOR SHALL BE RESPONSIBLE FOR ENSURING THAT ALL TRAFFIC CONTROL DEVICES AND BARRICADES ARE PROPERLY INSTALLED AND MAINTAINED IN ACCORDANCE WITH THE PLANS, SPECIFICATIONS, AND TEXAS MANUAL ON UNIFORM TRAFFIC CONTROL DEVICES (TXMUTCD).
2. THESE NOTES DO NOT, IN AND OF THEMSELVES, CONSTITUTE A TRAFFIC CONTROL PLAN. IN THE EVENT THAT THESE PLANS DO NOT INCLUDE TRAFFIC CONTROL, OR THAT THE CONTRACTOR WISHES TO VARY FROM TRAFFIC CONTROL INCLUDED WITH THE CONSTRUCTION PLANS, THE CONTRACTOR SHALL SUBMIT A TRAFFIC CONTROL PLAN TO THE CITY FOR REVIEW AND APPROVAL PRIOR TO CONSTRUCTION. THE CITY INSPECTOR AND ENGINEERING REPRESENTATIVE WILL ONLY BE RESPONSIBLE TO INSPECT THE TRAFFIC CONTROL DEVICES AND BARRICADES. IF, IN THE OPINION OF THE CITY INSPECTOR OR ENGINEERING REPRESENTATIVE, THE TRAFFIC CONTROL DEVICES DO NOT CONFORM TO ESTABLISHED STANDARDS OR ARE INCORRECTLY PLACED OR ARE INSUFFICIENT IN QUANTITY TO PROTECT THE GENERAL PUBLIC, THE CITY INSPECTOR SHALL HAVE THE OPTION TO STOP CONSTRUCTION OPERATIONS AT NO EXPENSE TO THE CITY UNTIL SUCH TIME AS THE CONDITIONS ARE CORRECTED BY THE CONTRACTOR.
3. THE CONTRACTOR SHALL NOTIFY THE CITY IMMEDIATELY IF THERE IS ANY CONFLICT BETWEEN THE TXMUTCD AND TRAFFIC CONTROL REQUIREMENTS WITHIN THE CONTRACT DOCUMENTS.
4. IF THE NEED ARISES, THE CITY INSPECTOR OR ENGINEERING REPRESENTATIVE MAY REQUIRE THE RELOCATION AND ADDITIONAL TRAFFIC CONTROL DEVICES AND BARRICADES AT THE CONTRACTOR'S EXPENSE.
5. THE CONTRACTOR SHALL NOTIFY TxDOT, COUNTY, ADJACENT CITY, AND PRIVATE OWNER PRIOR TO WORKING AT THEIR OWNED OR MAINTAINED ROADWAY AND INTERSECTION.
6. FOR ALL ROAD CLOSURE REQUESTS, THE CONTRACTOR SHALL SUBMIT AND OBTAIN CITY APPROVAL OF A TRAFFIC CONTROL PLAN AND WORK SCHEDULE AT LEAST TWO (2) WEEKS PRIOR TO COMMENCING WORK ASSOCIATED WITH THE ROAD CLOSURE.
7. WORK AROUND SCHOOLS SHALL BE SCHEDULED TO MINIMIZE IMPACTS TO THE SCHOOL. STREETS AND ACCESS SHALL NOT BE CLOSED DURING THE TIME STUDENTS ARE BEING DROPPED OFF AND PICKED UP FROM SCHOOL. WORK WITHIN A SCHOOL ZONE CAN ONLY OCCUR BETWEEN THE HOURS OF 9 AM AND 3 PM AS APPROVED BY THE CITY.
8. THE CONTRACTOR SHALL PROVIDE ACCESS FOR THE DELIVERY OF MAIL BY THE U.S. POSTAL SERVICE, AND COLLECTION OF SOLID WASTE AND RECYCLING, WHETHER PUBLIC OR PRIVATE.
9. THE CONTRACTOR SHALL ALWAYS MAINTAIN ACCESS TO ALL COMMERCIAL AND RESIDENTIAL DRIVEWAYS. THE CONTRACTOR SHALL PROVIDE A 48-HOUR MINIMUM NOTICE TO PROPERTY OWNERS AND THE CITY BEFORE ANY DRIVEWAY ACCESS MODIFICATION.
10. DURING ASPHALT OVERLAY, THE CONTRACTOR SHALL ALLOW RESIDENT TRAFFIC ACCESS TO THE STREET WITH PROPER GUIDANCE, DIRECTION, FLAGGER AND TRAFFIC CONTROL AND ONLY AT SUCH TIME THAT DAMAGE WILL NOT OCCUR TO THE NEW ASPHALT OVERLAY OR TO THE VEHICLES.
11. THE CONTRACTOR SHALL KEEP ALL TRAFFIC CONTROL DEVICES, BARRICADES, AND REFLECTIVE MARKINGS FREE FROM DUST AND DEBRIS. THE CONTRACTOR SHALL CLEAN THE DEVICES MONTHLY AND AT THE DIRECTION OF THE CITY.

UTILITIES:

1. THE EXISTENCE AND LOCATION OF UNDERGROUND UTILITIES INDICATED ON THE PLANS ARE TAKEN FROM AVAILABLE RECORDS AND ARE NOT GUARANTEED. THE LOCATION AND DEPTH OF EXISTING UTILITIES ARE APPROXIMATE ONLY AND SHALL BE INVESTIGATED AND VERIFIED BY THE CONTRACTOR BEFORE STARTING WORK. THE CONTRACTOR SHALL BE HELD RESPONSIBLE FOR ANY DAMAGE TO AND FOR THE MAINTENANCE AND PROTECTION OF THE EXISTING UTILITIES WHETHER SHOWN OR NOTED ON THE PLANS, INCLUDING BUT NOT LIMITED TO EXISTING WATER, SANITARY SEWER, GAS, STORM SEWERS, ELECTRIC AND TELECOMMUNICATION LINES, AND SERVICES.
2. THE CONTRACTOR SHALL VERIFY THE LOCATION OF ALL UTILITIES THREE (3) WEEKS MINIMUM IN ADVANCE OF ALL WORK ACTIVITIES.
3. IN THE EVENT OF DAMAGE TO UNDERGROUND FACILITIES, WHETHER SHOWN OR NOT IN THE PLANS, THE CONTRACTOR SHALL MAKE NECESSARY REPAIRS TO RESTORE THE FACILITY BACK IN SERVICE AND AT NO COST TO THE CITY. REPAIRS SHALL CONFORM TO THE REQUIREMENTS OF THE UTILITY OR AGENCY SERVICING THE FACILITY.
4. THE CONTRACTOR SHALL COORDINATE WITH AND GAIN APPROVAL FROM THE UTILITY COMPANY OWNING THE FACILITY PRIOR TO RELOCATION OR ADJUSTMENT AS REQUIRED FOR CONFORMANCE TO PROJECT ALIGNMENT OR GRADES. ADJUSTMENT OF ALL EXISTING MANHOLES, THAT REMAIN IN SERVICE TO PROJECT GRADES SHALL BE THE CONTRACTOR'S RESPONSIBILITY.
5. OCCUPATIONAL SAFETY AND HEALTH ADMINISTRATION (OSHA) REGULATIONS PROHIBIT OPERATIONS THAT WILL BRING PERSONS OR EQUIPMENT WITHIN AN ENERGIZED LINE. WHERE WORKERS AND/OR EQUIPMENT HAVE TO WORK CLOSE TO AN ENERGIZED ELECTRICAL LINE, THE CONTRACTOR SHALL NOTIFY THE ELECTRICAL POWER COMPANY INVOLVED AND MAKE WHATEVER ADJUSTMENTS NECESSARY TO ENSURE THE SAFETY OF THOSE WORKMEN.
6. DUE TO FEDERAL REGULATIONS, GAS COMPANIES MUST ALWAYS MAINTAIN ACCESS TO GAS VALVES. THE CONTRACTOR MUST PROTECT AND WORK AROUND ANY GAS VALVES THAT ARE IN THE PROJECT AREA.
7. THE CONTRACTOR WILL ABIDE BY ALL APPLICABLE FEDERAL, STATE, AND LOCAL LAWS GOVERNING EXCAVATION. THE CONTRACTOR AND THE CONTRACTOR'S INDEPENDENTLY RETAINED EMPLOYEE OR SAFETY CONSULTANT SHALL IMPLEMENT A TRENCH SAFETY PROGRAM IN ACCORDANCE WITH OSHA STANDARDS GOVERNING THE PRESENCE AND ACTIVITIES OF INDIVIDUALS WORKING IN AND AROUND TRENCH EXCAVATION.
8. ALL UTILITY TRENCH FILL MATERIAL SHALL BE PLACED IN UNIFORM LAYERS NOT TO EXCEED 12 IN. LOOSE OUTSIDE OF PAVEMENT AND 6 IN. LOOSE UNDER PAVEMENT. DETERMINE THE MAXIMUM LIFT THICKNESS BASED ON THE ABILITY OF THE COMPACTING EQUIPMENT TO ADEQUATELY MEET THE REQUIRED DENSITY. EACH LAYER OF MATERIAL SHALL BE COMPACTED TO 95% DENSITY, 2% OPTIMUM MOISTURE AS DETERMINED BY TEST METHODS TEX-113-E, TEX-114-E, TEX-115-E. DENSITY TESTS SHALL BE TAKEN AT A MINIMUM OF 100 LINEAR FEET INTERVALS FOR EACH LIFT AS DETERMINED BY THE CITY INSPECTOR.
9. THE CONTRACTOR SHALL NOTIFY THE CITY INSPECTOR 48 HOURS PRIOR TO THE BACKFILL OF ANY UTILITY TRENCHES TO SCHEDULE DENSITY TESTS AS REQUIRED.

TREE PROTECTION:

1. THE CONTRACTOR SHALL PROTECT ALL TREES WITHIN THE PROJECT LIMITS AND TREES OUTSIDE THE PROJECT LIMITS THAT THE PROJECT MAY IMPACT.
2. NO UTILITY OR STREET EXCAVATION WORK SHALL BEGIN IN AREAS WHERE TREE PRESERVATION AND TREATMENT MEASURES HAVE NOT BEEN COMPLETED AND APPROVED.
3. TREE PROTECTION FENCING SHALL BE REQUIRED, AND TREE PROTECTION FENCING SHALL BE INSTALLED, MAINTAINED, AND REPAIRED BY THE CONTRACTOR DURING SITE CONSTRUCTION.
4. EXPOSED ROOTS SHALL BE COVERED AT THE END OF THE DAY USING TECHNIQUES SUCH AS COVERING WITH SOIL, MULCH OR A ROOT PROTECTION ZONE WILL BE ESTABLISHED AROUND EACH TREE OR ANY VEGETATION TO BE PRESERVED. A ROOT PROTECTION ZONE SHALL BE AN AREA DEFINED BY THE RADIUS EXTENDING OUTWARD FROM THE TRUNK OF TREE A DISTANCE OF 1 FT PER DIAMETER INCH OF THE TREE RADIUS AT BREAST HEIGHT OF 4.5 FT. AS AN EXAMPLE, A 10 IN DIAMETER TREE WOULD HAVE A 10 FT RADIUS ROOT PROTECTION ZONE AROUND THE TREE.
5. NO EQUIPMENT, VEHICLES OR MATERIALS SHALL OPERATE OR BE STORED WITHIN THE ROOT PROTECTION ZONE OF ANY TREE NEAR THE PROJECT. NO CLEAN-OUT AREAS SHALL BE CONSTRUCTED SO THAT THE MATERIAL WILL BE IN OR ADJACENT TO THE ROOT PROTECTION ZONE.
6. ROOTS OR BRANCHES IN CONFLICT WITH THE CONSTRUCTION SHALL BE CUT CLEANLY ACCORDING TO TxDOT ROADSIDE VEGETATION MAINTENANCE MANUAL. ALL OAK WOUNDS SHALL BE PAINTED OVER WITHIN 30 MINUTES TO PREVENT OAK WILT.
7. TREES MUST BE MAINTAINED IN GOOD HEALTH THROUGHOUT THE CONSTRUCTION PROCESS. MAINTENANCE MAY INCLUDE WATERING THE ROOT PROTECTION ZONE AND OR WASHING FOLIAGE.
8. NO WIRES, NAILS OR OTHER MATERIALS MAY BE ATTACHED TO THE PROTECTED TREES.
9. TREES, WHICH ARE DAMAGED OR LOST DUE TO THE CONTRACTOR'S NEGLIGENCE DURING CONSTRUCTION, SHALL BE MITIGATED TO THE CITY'S SATISFACTION.
10. TREES, TREE LIMBS, BUSHES AND SHRUBS LOCATED IN THE CITY STREET OR ALLEY RIGHT-OF-WAY OR PERMANENT EASEMENTS WHICH INTERFERE WITH THE PROPOSED CONSTRUCTION ACTIVITIES MAY BE NEATLY TRIMMED BY THE CONTRACTOR ONLY AFTER APPROVAL FROM THE CITY INSPECTOR. THERE SHALL BE NO SEPARATE PAY FOR ADDITIONAL COST OR EFFORT INCURRED BY THE CONTRACTOR WHERE REQUIRED TO WORK AROUND AND/OR UNDER EXISTING TREES OR FOR THE REMOVAL OF ADDITIONAL BRANCHES AND SHRUBS.
11. SAPLINGS, SHRUBS, OR BUSHES TO BE CLEARED FROM THE PROTECTED ROOT ZONE AREA OF A LARGE TREE SHALL BE REMOVED BY HAND AS DESIGNATED BY THE CITY INSPECTOR.

ROADWAY:

1. ALL ROADWAY COMPACTION TESTS SHALL BE COORDINATED WITH THE CITY INSPECTOR. FLEXIBLE BASE OR FILL MATERIAL SHALL BE PLACED IN UNIFORM LAYERS NOT TO EXCEED 6 IN COMPACTED. EACH LAYER OF MATERIAL, INCLUSIVE OF SUBGRADE, SHALL BE COMPACTED AS SPECIFIED AND TESTED FOR DENSITY AND MOISTURE IN ACCORDANCE WITH TEST METHODS TEX-113-E, TEX-114-E, TEX-115-E. THE NUMBER AND LOCATION OF REQUIRED TESTS SHALL BE DETERMINED BY THE GEOTECHNICAL ENGINEER AND APPROVED BY THE CITY INSPECTOR. AT A MINIMUM, TESTS SHALL BE TAKEN EVERY 100 LINEAR FEET FOR EACH LIFT. UPON COMPLETION OF TESTS, THE GEOTECHNICAL ENGINEER WILL PROVIDE THE CITY INSPECTOR WITH ALL TESTING DOCUMENTATION AND A CERTIFICATION STATING THAT THE PLACEMENT OF FLEXIBLE BASE, FILL MATERIAL, AND SUBGRADE HAS BEEN COMPLETED PER THE CONTRACT DOCUMENTS.
2. THE CONTRACTOR SHALL PROVIDE A 48-HOUR MINIMUM NOTICE TO THE CITY INSPECTOR PRIOR TO ANY WORK REQUIRING MATERIAL TESTING.
3. THE CONTRACTOR SHALL SCHEDULE A PRE-PAVE INSPECTION AND COORDINATION MEETING 72 HOURS PRIOR TO PLACING ASPHALT.
4. UNLESS NOTED OTHERWISE IN THE CONTRACT DOCUMENTS, ASPHALTIC CONCRETE PAVEMENT SHALL BE TYPE "D" HOT MIX ASPHALT AS DEFINED IN TxDOT'S STANDARD SPECIFICATIONS.
5. THE CITY WILL NOT ACCEPT THE USE OF RECYCLED ASPHALT PAVEMENT (RAP) OR RECYCLED ASPHALT SHINGLES (RAS) IN ASPHALT MIXTURES FOR NEW ROADWAYS. ANY DEBRIS INCLUSIONS WITHIN NEW ASPHALT PAVEMENTS WILL RESULT IN ASPHALT REMOVAL AND REPLACEMENT FROM CURB TO CURB FOR LIMITS TO BE DETERMINED BY THE CITY.
6. THE ASPHALTIC CONCRETE SURFACE COURSE SHALL BE PLANT MIXED, HOT LAID TYPE "D" MEETING THE SPECIFICATION REQUIREMENTS OF TxDOT ITEM 340. THE MIX SHALL BE DESIGNED FOR STABILITY OF AT LEAST 35 AND SHALL BE COMPACTED TO BETWEEN 92 AND 97 PERCENT OF THE MAXIMUM THEORETICAL DENSITY AS DETERMINED BY TxDOT TEST METHOD TEX-227-F. THE ASPHALT CEMENT CONTENT BY PERCENT OF TOTAL MIXTURE WEIGHT SHALL FALL WITHIN A TOLERANCE OF +0.5 PERCENT FROM A SPECIFIC MIX DESIGN.
7. A TxDOT TYPE II B-B BLUE REFLECTIVE RAISED PAVEMENT MARKER SHALL BE INSTALLED IN THE CENTER OF THE ROADWAY ADJACENT TO ALL FIRE HYDRANTS. IN LOCATIONS WHERE HYDRANTS ARE SITUATED ON CORNERS, BLUE REFLECTIVE RAISED PAVEMENT MARKERS SHALL BE INSTALLED ON BOTH APPROACHES WHICH FRONT OF THE HYDRANT. THE RAISED PAVEMENT MARKER SHALL MEET TxDOT MATERIAL, EPOXY, AND ADHESIVE SPECIFICATIONS.
8. ALL CONCRETE FOR FLATWORK, INCLUDING CURB AND GUTTER, SIDEWALKS, AND DRIVEWAYS, SHALL BE CLASS A WITH A MINIMUM COMPRESSIVE STRENGTH OF 3,000 PSI. MATERIAL TESTING METHODS AND FREQUENCY SHALL BE AS DESCRIBED IN ITEM 421 OF THE TxDOT STANDARD SPECIFICATIONS.

GROUNDWATER:

1. IT SHALL BE THE RESPONSIBILITY OF THE CONTRACTOR TO IMMEDIATELY NOTIFY THE CITY IF THE PRESENCE OF GROUNDWATER WITHIN THE SITE IS EVIDENT. UPON NOTIFICATION, THE PROJECT ENGINEER SHALL RESPOND WITH PLAN REVISIONS FOR THE MITIGATION OF THE GROUNDWATER ISSUE. THE CITY SHALL RESPOND WITHIN TWO (2) BUSINESS DAYS UPON RECEIPT OF THE MITIGATION PLAN. ALL CONSTRUCTION ACTIVITY IMPACTED BY THE DISCOVERY OF GROUNDWATER SHALL BE SUSPENDED UNTIL THE CITY GRANTS WRITTEN APPROVAL FOR THE GROUNDWATER MITIGATION PLAN.

DEVELOPMENT:

1. THE ENGINEER OF RECORD IS RESPONSIBLE FOR THE ADEQUACY OF THE CONSTRUCTION PLANS AND MEETING ALL PROFESSIONAL PRACTICE REQUIREMENTS OF APPLICABLE FEDERAL, STATE, AND LOCAL STATUTES, CODES, REGULATIONS, RULES, ORDINANCE, OR STANDARDS FOR THE PROJECT.
2. THE CONTRACTOR SHALL CONTACT THE CITY OF NEW BRAUNFELS TO SCHEDULE A PRECONSTRUCTION MEETING BEFORE CONSTRUCTION.
3. FOR PUBLIC INFRASTRUCTURE OR GRADING PERMITS:
   A. THE CONTRACTOR SHALL COORDINATE MATERIAL TESTING AND INSPECTIONS WITH THE PROJECT INSPECTOR BEFORE 12 PM AND A MINIMUM OF 48 HOURS BEFORE THE REQUESTED INSPECTION AS OUTLINED IN THE PRE-CONSTRUCTION MEETING.
   B. EACH INSPECTION REQUEST IS ALLOTTED ONE (1) HOUR UNLESS ADDITIONAL TIME IS REQUESTED.
4. FOR COMMERCIAL PERMITS:
   A. THE CONTRACTOR SHALL COORDINATE INSPECTION REQUESTS WITH THE BUILDING DEPARTMENT AS OUTLINED BY THE APPROVED PERMIT.
   B. EACH INSPECTION REQUEST IS ALLOTTED ONE (1) HOUR UNLESS ADDITIONAL TIME IS REQUESTED.
5. APPROVAL OF THE CONSTRUCTION PLANS AND ASSOCIATED PERMIT IS INVALID IF CONSTRUCTION HAS NOT COMMENCED WITHIN-ONE YEAR OF CONSTRUCTION PLAN APPROVAL.
6. STABILIZED CONSTRUCTION AREA SHALL BE CONSTRUCTED OF 3 IN X 5 IN ROCK TO BE PLACED A MINIMUM LENGTH OF 25 FT AND MAINTAINED SO THAT CONSTRUCTION DEBRIS DOES NOT FALL WITHIN THE CITY RIGHT-OF-WAY. RIGHT-OF-WAY MUST BE CLEARED FROM MUD, ROCKS, ETC. AT ALL TIMES.
7. THE ENGINEER OF RECORD IS RESPONSIBLE FOR THE EROSION AND STORMWATER CONTROL DESIGN TO MITIGATE OFF-SITE IMPACTS IN ALL PHASES OF CONSTRUCTION.
8. THE CONTRACTOR IS RESPONSIBLE FOR INSTALLING IMPROVEMENTS SUFFICIENT TO MITIGATE THE IMPACT OF DRAINAGE AND STORMWATER RUNOFF DURING CONSTRUCTION.
9. THE ELEVATION OF THE LOWEST FLOOR SHALL BE AT LEAST 10 IN ABOVE THE FINISHED GRADE OF THE SURROUNDING GROUND, WHICH SHALL BE SLOPED IN A FASHION SO AS TO DIRECT STORMWATER AWAY FROM THE STRUCTURE. PROPERTIES ADJACENT TO STORMWATER CONVEYANCE STRUCTURES MUST HAVE FLOOR SLAB ELEVATION OR BOTTOM OF FLOOR JOISTS A MINIMUM OF ONE FOOT ABOVE THE 100-YEAR WATER FLOW ELEVATION IN THE STRUCTURE. DRIVEWAYS SERVING HOUSES ON THE DOWNHILL SIDE OF THE STREET SHALL HAVE A PROPERLY SIZED CROSS SWALE PREVENTING RUNOFF FROM ENTERING THE GARAGE.
10. PROCTORS SHALL BE SAMPLED FROM ON-SITE MATERIAL (ON-SITE IS DEFINED AS LIMITS OF CONSTRUCTION FOR THE CONSTRUCTION PLANS). THE CITY INSPECTOR SHALL BE PRESENT FOR MATERIAL SAMPLING AND A COPY OF THE PROCTOR RESULTS SHALL BE DELIVERED TO THE CITY INSPECTOR PRIOR TO ANY DENSITY TESTS.
11. THE CONTRACTOR SHALL ENSURE THAT SIDEWALKS, CURB RAMPS, AND DRIVEWAYS ARE BUILT IN ACCORDANCE WITH AMERICANS WITH DISABILITIES ACT (ADA) STANDARDS.
12. NO VALVES AND HYDRANTS SHALL BE CONSTRUCTED WITHIN SIDEWALKS, CURBS, CURB RAMPS, AND DRIVEWAYS.
13. THE CONTRACTOR SHALL FURNISH AND INSTALL ALL REGULATORY AND WARNING SIGNS, STREET NAME SIGNS, AND SIGN MOUNTS IN ACCORDANCE WITH THE CONSTRUCTION PLANS.
14. THE CONTRACTOR SHALL INSTALL ALL PAVEMENT MARKINGS IN ACCORDANCE WITH THE CONSTRUCTION PLANS. THE CONTRACTOR SHALL NOTIFY THE CITY INSPECTOR AT LEAST 48 HOURS BEFORE THE INSTALLATION OF ALL SEALER AND FINAL MARKINGS.
15. WHEN ALL OF THE IMPROVEMENTS ARE FOUND TO BE CONSTRUCTED AND COMPLETED IN ACCORDANCE WITH THE APPROVED PLANS AND SPECIFICATIONS, AND UPON RECEIPT OF ONE SET OF RECORD DRAWING PLANS, AND A DIGITAL COPY OF ALL PLANS (PDF COPY) THE CITY SHALL ACCEPT SUCH IMPROVEMENTS SUBJECT TO THE GUARANTY OF MATERIAL AND WORKMANSHIP PROVISIONS REQUIRED BY CITY CODE.

ADDITIONAL NOTES:

1. CONTRACTOR SHALL KEEP ALL NUISANCE GRASSES, WEEDS, DEBRIS, TRASH AND RUBBISH CLEAR AND CLEAN THROUGHOUT THE DURATION OF THE CONTRACTED PROJECT TIMELINE WITHIN THE ENTIRE WORKZONE AND/OR ANY DISTURBED AREAS.

Per Construction Plan Requirements:

ALL RESPONSIBILITY FOR THE ADEQUACY OF THESE PLANS REMAINS WITH THE ENGINEER OF RECORD. IN ACCEPTING THESE PLANS, THE CITY OF NEW BRAUNFELS MUST RELY UPON THE ADEQUACY OF THE WORK OF THE ENGINEER OF RECORD.

IF CONSTRUCTION HAS NOT COMMENCED WITHIN ONE-YEAR OF CITY APPROVAL FOR CONSTRUCTION INSPECTION, THAT APPROVAL IS NO LONGER VALID.

GAS UTILITIES ARE NOT INCLUDED IN THE CIVIL CONSTRUCTION PLANS. FINAL GAS UTILITY DESIGN SHALL BE APPROVED BY THE CITY FOR ANY WORK WITHIN PUBLIC RIGHT-OF-WAY.

TEXAS 811 NOTIFICATION SYSTEM
CALL BEFORE YOU DIG!!!
WWW.TEXAS811.ORG/ OR
TEXAS811 OR 1-800-344-8377

PER FEMA PANEL NO. 48091C0455F, DATED SEPTEMBER 2, 2009, THE PROJECT AREA IS LOCATED WITHIN ZONE X (AREA OF MINIMAL FLOOD HAZARD) EXCEPT THE AREA NEAR THE BRIDGE OVER THE GUADALUPE RIVER, WHICH IS IN ZONE AE WITH BFE 621.

PROJECT AREA IS IN EDWARDS AQUIFER TRANSITION ZONE (https://www.tceq.texas.gov/gis/edwards-viewer.html).

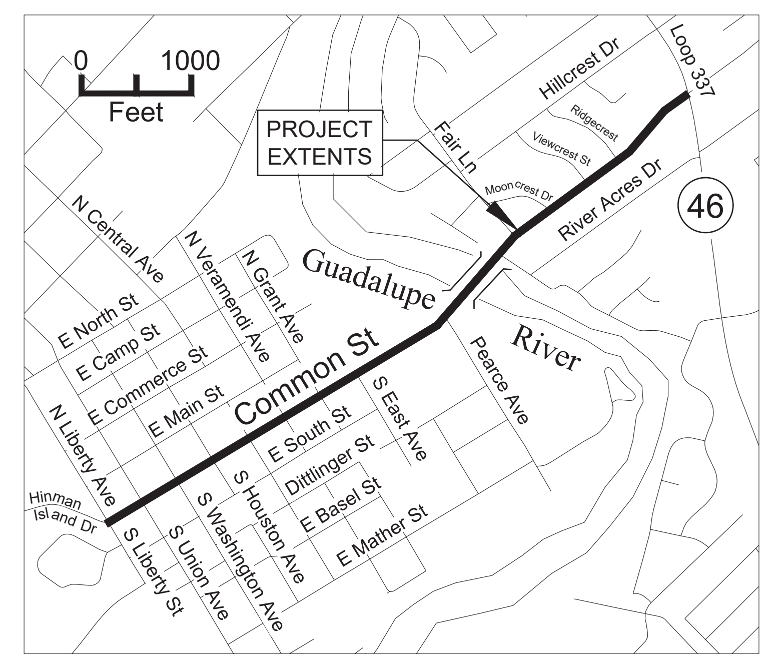

VICINITY MAP

REV	DESCRIPTION	DATE	APPR
0	ISSUED FOR BID	02/12/24	AG

GENERAL NOTES

COMMON STREET PEDESTRIAN IMPROVEMENTS

CITY OF NEW BRAUNFELS
550 Landa Street | New Braunfels, TX 78130

DESIGN BY: KM
DRAWN BY: EFC
CHECKED BY: JB
APPROVED BY: AG

City of New Braunfels

ENGINEER:
THE GOODMAN CORPORATION
3200 TRAVIS, SUITE 200
HOUSTON, TEXAS 77006
www.TheGoodmanCorp.com
(713) 951-7951
TBPELS Firm Registration No. 19990

SURVEYOR:
MBCO
ENGINEERING + SURVEYING

STATE OF TEXAS
ASHISH GHOSH
111103
LICENSED PROFESSIONAL ENGINEER
2/13/2024

DATE: 02/12/2024
SCALE: N/A

SHEET NUMBER
3 OF 97

W:\00_TGC Project Files\NBR100\CAD\NBR100_GENERAL.dwg, 2/12/2024

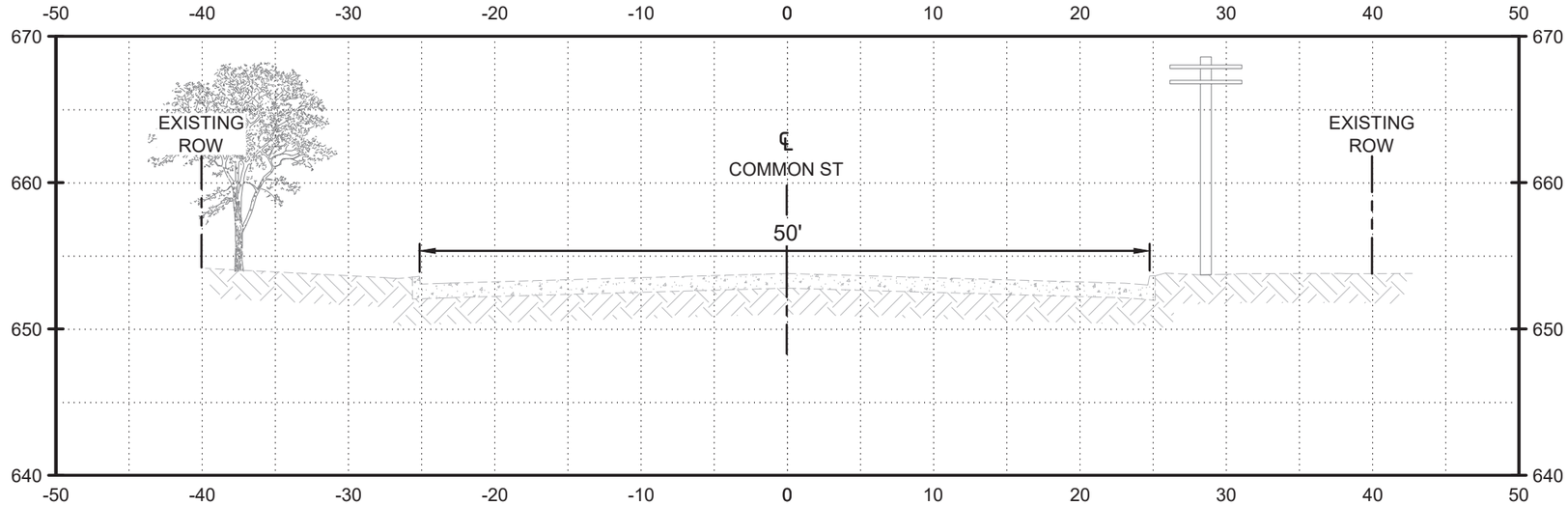

TYPICAL SECTION - EXISTING CONDITIONS

NOTE:

1. EXISTING TYPICAL SECTION VARIES THROUGH PROJECT SITE: AREAS OF EXISTING SIDEWALK ON EITHER/BOTH SIDES OF ROADWAY.

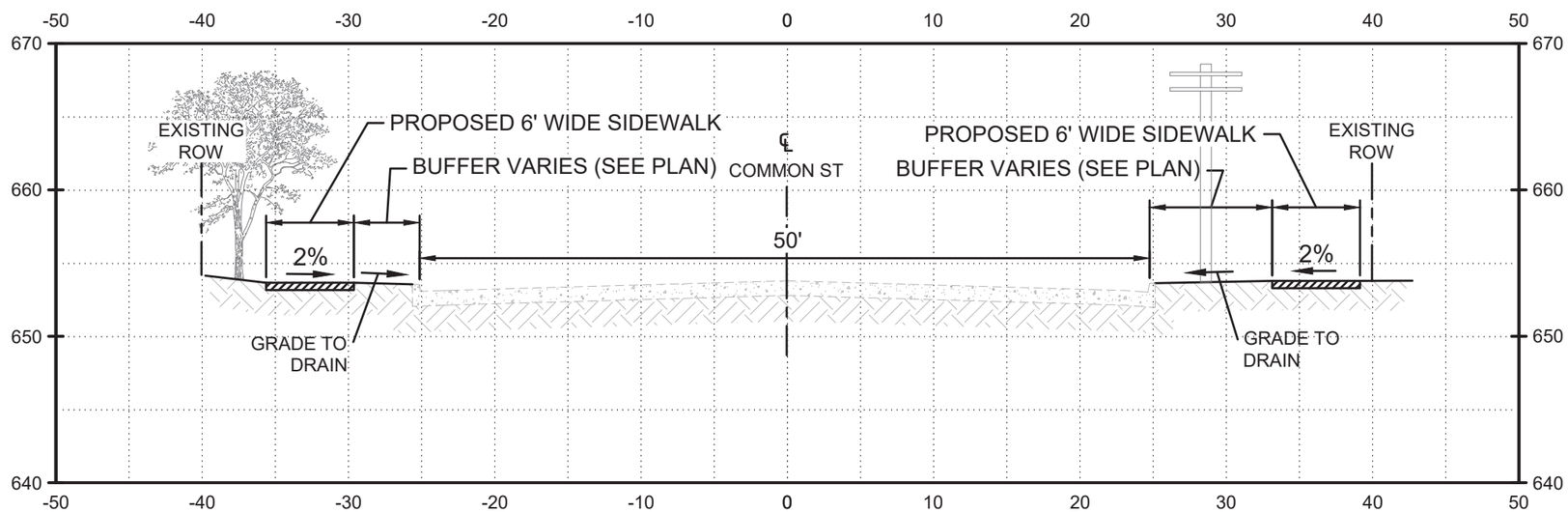

TYPICAL SECTION - PROPOSED SIDEWALKS

NOTE:

1. SAFETY BUFFER VARIES AT SOME PLACES TO AVOID CONFLICT WITH EXISTING TREES, UTILITY POLES, AND OTHER OBSTRUCTIONS.

REV	DESCRIPTION	DATE	APPR
0	ISSUED FOR BID	02/12/24	AG

TYPICAL SECTIONS

COMMON STREET PEDESTRIAN IMPROVEMENTS

CITY OF NEW BRAUNFELS
550 Landa Street | New Braunfels, TX 78130

DESIGN BY: KM
DRAWN BY: EFC
CHECKED BY: JB
APPROVED BY: AG

City of New Braunfels

ENGINEER:
THE GOODMAN CORPORATION
3200 TRAVIS, SUITE 200
HOUSTON, TEXAS 77006
www.TheGoodmanCorp.com
(713) 951-7951
TBPELS Firm Registration No. 19990

SURVEYOR:
MBCO ENGINEERING + SURVEYING

STATE OF TEXAS
ASHISH GHOSH
111103
LICENSED
PROFESSIONAL ENGINEER
2/13/2024

DATE: 02/12/2024
SCALE: AS NOTED

SHEET NUMBER
4 OF 97

W:\00_TGC Project Files\NBR100\CAD\NBR100_SW_PLAN.dwg, 2/12/2024

SUMMARY OF QUANTITIES

	DEMOLITION & SWPPP PLAN SHEET NO.:		31	32	33	34	35	36	37	38	TOTAL ESTIMATED QUANTITY
	SIDEWALK PLAN SHEET NO.:		39	40	41	42	43	44	45	46	
		FROM/TO STA	00+00	8+50	18+00	27+40	36+20	45+50	54+75	63+00	
BID CODE	DESCRIPTION	UNIT	8+50	18+00	27+40	36+20	45+50	54+75	63+00	67+50	
100-6001	PREPARING ROW	AC	0.39	0.45	0.40	0.35	0.19	0.44	0.41	0.22	2.85
100-6006	PREP ROW (TREE)(LESS THAN 24" DIA)	EA	3	2							5
100-6007	PREP ROW (TREE)(GREATER THAN 24" DIA)	EA	2	1							3
104-6009	REMOVING CONC (RIPRAP)	SY				16					16
104-6017	REMOVING CONC (DRIVEWAYS)	SY	384	97	174	138	23	350	329	173	1,668
104-6029	REMOVING CONC (CURB OR CURB & GUTTER)	LF	245	140	164	34	53	237	146	73	1,092
104-6036	REMOVING CONC (SIDEWALK OR RAMP)	SY	156	196	112	583	444	69	15		1,575
105-6008	REMOVING STAB BASE AND ASPH PAV (6")	SY	103	33	119	20				286	561
105-6128	REMOVING UNTREATED BASE (8")	SY		37							37
134-6011	BACKFILLING PAVEMENT EDGES	CY								35	35
160-6003	FURNISHING AND PLACING TOPSOIL (4")	SY	693	906	837	651	477	842	799	390	5,595
162-6002	BLOCK SODDING	SY	693	906	837	651	477	842	799	390	5,595
168-6001	VEGETATIVE WATERING	MG	11	14	13	10	7	13	13	6	88
351-6008	FLEXIBLE PAVEMENT STRUCTURE REPAIR(12")	SY								50	50
416-6031	DRILL SHAFT (TRF SIG POLE) (30 IN)	LF		22	22						44
420-6074	CL C CONC (MISC)	CY				3					3
432-6001	RIPRAP (CONC)(4 IN)	CY								17	17
432-6003	RIPRAP (CONC)(6 IN)	CY				3					3
450-6048	RAIL (HANDRAIL)(TY B)	LF				26					26
471-6003	GRATE & FRAME	EA				6					6
479-6003	ADJUSTING MANHOLES & INLETS	EA		6	5			7	6	1	25
500-6001	MOBILIZATION	LS									1
502-6001	BARRICADES, SIGNS AND TRAFFIC HANDLING	MO									6
506-6035	SANDBAGS FOR EROSION CONTROL	EA	22	20	15	8	7	19	13	11	115
506-6038	TEMP SEDMT CONT FENCE (INSTALL)	LF	650	1,755	1,626	1,328	1,187	1,291	1,370	431	9,638
506-6039	TEMP SEDMT CONT FENCE (REMOVE)	LF	650	1,755	1,626	1,328	1,187	1,291	1,370	431	9,638
506-6042	BIODEG EROSN CONT LOGS (INSTL) (18")	LF					129			75	204
506-6043	BIODEG EROSN CONT LOGS (REMOVE)	LF					129			75	204
529-6001	CONC CURB (TY I)	LF		14	28					89	131
529-6008	CONC CURB & GUTTER (TY II)	LF	146	68	50	10	20	20		148	462
529-6015	CONC CURB (TY C1)	LF	297		31	95	25	302	330	187	1,267
529-6027	CONC CURB (TY C2)	LF							200		200
530-6004	DRIVEWAYS (CONC)	SY	436	211	95	164		363	352	212	1,833
531-6001	CONC SIDEWALKS (4")	SY	545	1,029	931	838	619	903	790	410	6,065
531-6004	CURB RAMPS (TY 1)*	EA	1	3	5		1			4	14
531-6009	CURB RAMPS (TY 6)*	EA	3	1	6		1			1	12
531-6010	CURB RAMPS (TY 7)*	EA	4	4	5	1	3	6	2	1	26
560-6025	RELOCATE EXISTING MAILBOX	EA	1	6				4	5		16
618-6046	CONDT (PVC) (SCH 80) (2")	LF		120	241						361
618-6047	CONDT (PVC) (SCH 80) (2") (BORE)	LF		60	68						128
618-6053	CONDT (PVC) (SCH 80) (3")	LF		60	70						130
618-6054	CONDT (PVC) (SCH 80) (3") (BORE)	LF		60	68						128
620-6007	ELEC CONDR (NO.8) BARE	LF		80	226						306
620-6011	ELEC CONDR (NO.4) BARE	LF		60	128						188
620-6012	ELEC CONDR (NO.4) INSULATED	LF		120	256						376
624-6008	GROUND BOX TY C (162911)W/APRON	EA		2	3						5
624-6012	GROUND BOX TY E (122317)W/APRON	EA		1	1						2
628-6164	ELC SRV TY D 120/240 070(NS)AL(E)PS(U)	EA		1	1						2
636-6001	ALUMINUM SIGNS (TY A)	SF		10	10						20
644-6001	IN SM RD SN SUP&AM TY10BWG(1)SA(P)	EA		8	8	1					17
644-6068	RELOCATE SM RD SN SUP&AM TY 10BWG	EA	9	9	7	2	5	6	3	3	44
666-6042	REFL PAV MRK TY I (W)12"(SLD)(100MIL)	LF		227	147	48					422
666-6048	REFL PAV MRK TY I (W)24"(SLD)(100MIL)	LF	274	507	578	23	150	213	76	799	2,620
666-6228	PAVEMENT SEALER 12"	LF		227	147	48					422
666-6230	PAVEMENT SEALER 24"	LF	274	507	578	23	150	213	76	799	2,620
677-6001	ELIM EXT PAV MRK & MRKS (4")	LF	134	44	134	45				31	388
677-6002	ELIM EXT PAV MRK & MRKS (6")	LF								20	20
677-6007	ELIM EXT PAV MRK & MRKS (24")	LF								758	758
678-6006	PAV SURF PREP FOR MRK (12")	LF		227	147	48					422
678-6008	PAV SURF PREP FOR MRK (24")	LF	274	507	578	23	150	213	76	799	2,620
680-6002	INSTALL HWY TRF SIG (ISOLATED)	EA		1	1						2
682-6003	VEH SIG SEC (12")LED(YEL)	EA		4	4						8
682-6005	VEH SIG SEC (12")LED(RED)	EA		8	8						16
682-6018	PED SIG SEC (LED)(COUNTDOWN)	EA		2	2						4
682-6051	BACKPLATE W/REFL BRDR(3 SEC)ALUM	EA		4	4						8
684-6007	TRF SIG CBL (TY A)(12 AWG)(2 CONDR)	LF		160	274						434
684-6010	TRF SIG CBL (TY A)(12 AWG)(5 CONDR)	LF		120	158						278
684-6012	TRF SIG CBL (TY A)(12 AWG)(7 CONDR)	LF		120	158						278
684-6079	TRF SIG CBL (TY C)(12 AWG)(2 CONDR)	LF		120	158						278
686-6027	INS TRF SIG PL AM(S)1 ARM(24')LUM	EA		2	1						3
686-6035	INS TRF SIG PL AM(S)1 ARM(32')LUM	EA		0	1						1
688-6001	PED DETECT PUSH BUTTON (APS)	EA		2	2						4
5084-6001	FIXED BOLLARD	EA								3	3

* PANEL TYPE TRUNCATED DOMES

REV	DESCRIPTION	DATE	APPR
0	ISSUED FOR BID	02/12/24	AG

SUMMARY OF QUANTITIES

COMMON STREET PEDESTRIAN IMPROVEMENTS

CITY OF NEW BRAUNFELS
550 Landa Street | New Braunfels, TX 78130

DESIGN BY: KM
DRAWN BY: EFC
CHECKED BY: JB
APPROVED BY: AG

City of New Braunfels

ENGINEER:
THE GOODMAN CORPORATION
3200 TRAVIS, SUITE 200
HOUSTON, TEXAS 77006
www.TheGoodmanCorp.com
(713) 951-7951
TBPELS Firm Registration No. 19990

SURVEYOR:
MBCO ENGINEERING + SURVEYING

STATE OF TEXAS
ASHISH GHOSH
111103
LICENSED
PROFESSIONAL ENGINEER
2/13/2024

DATE: 02/12/2024
SCALE: AS NOTED

SHEET NUMBER
5 OF 97

W:\00_TGC Project Files\NBR100\CAD\NBR100_GENERAL.dwg, 2/12/2024

DETOURS, BARRICADES, WARNING SIGNS, AND SEQUENCE OF WORK

THE CONTRACTOR'S ATTENTION IS DIRECTED TO THE REQUIREMENTS OF ITEM 7, “LEGAL RELATIONS AND RESPONSIBILITIES TO THE PUBLIC” OF THE STANDARD SPECIFICATIONS. IN ADDITION TO THESE REQUIREMENTS, THE FOLLOWING PROVISIONS SHALL GOVERN ON THIS CONTRACT:

A. GENERAL

1. TRAFFIC MUST BE HANDLED THROUGHOUT THE PROJECT DURING CONSTRUCTION. THE CONTRACTOR IS RESPONSIBLE FOR PROVIDING A SAFE AND COMFORTABLE PASSAGE FOR VEHICULAR AND PEDESTRIAN TRAFFIC WITH MINIMAL INCONVENIENCE TO THE PUBLIC, AS SHOWN IN THE PLANS OR AS DIRECTED/APPROVED BY THE ENGINEER.
2. THE CONTRACTOR MAY PROPOSE/RECOMMEND MODIFICATIONS TO THE SEQUENCE OF WORK FOR CONSIDERATION BY THE ENGINEER. ANY MAJOR RECOMMENDED MODIFICATION BY THE CONTRACTOR SHALL INCLUDE ANY CHANGES TO THE VARIOUS BID ITEMS, IMPACT TO TRAFFIC, AND EFFECT ON OVERALL PROJECT IN TIME AND COST. IF THIS PROPOSAL IS IMPLEMENTED, THE CONTRACTOR WILL BE RESPONSIBLE FOR DEVELOPING DETAILED PLAN SHEETS TO BE SEALED BY A LICENSED PROFESSIONAL ENGINEER FOR INCLUSION WITH THE CHANGE ORDER. THE CONTRACTOR CANNOT PROCEED WITH ANY CONSTRUCTION OPERATIONS BASED ON A REVISED PHASE/SEQUENCE UNLESS WRITTEN APPROVAL IS OBTAINED FROM THE ENGINEER. IF AT ANY TIME DURING CONSTRUCTION THE CONTRACTOR'S PROPOSED PLAN OF OPERATION FOR HANDLING TRAFFIC DOES NOT PROVIDE FOR SAFE AND COMFORTABLE MOVEMENT, THE CONTRACTOR WILL IMMEDIATELY CHANGE THEIR OPERATION TO CORRECT THE UNSATISFACTORY CONDITION.
3. DO NOT STORE ANY CONSTRUCTION MATERIAL OR EQUIPMENT AT ANY LOCATION THAT WILL CONSTITUTE A HAZARD AND WILL ENDANGER TRAFFIC.
4. THE CONTRACTOR WILL PROVIDE ADVANCE NOTIFICATION TO THE ENGINEER OF ANY LANE CLOSURES FOR ALL TEMPORARY AND/OR PARTIAL OR FULL ROAD CLOSURES OR DETOURS. SEE GENERAL NOTES FOR NOTIFICATION REQUIREMENTS. 3 DAY MINIMUM NOTIFICATION FOR LANE CLOSURES; 7 DAY MINIMUM FOR DETOURS.
5. ACCESS TO ADJOINING PROPERTY MUST BE MAINTAINED AT ALL TIMES.
6. TEMPORARY DRAINAGE IS THE RESPONSIBILITY OF THE CONTRACTOR.
7. AT NO TIME SHALL TWO CONSECUTIVE INTERSECTING ROADWAYS BE CLOSED AT ONE TIME DURING CONSTRUCTION.
8. UNLESS OTHERWISE NOTED IN THE PLANS AND/OR DIRECTED BY THE ENGINEER, DAILY LANE CLOSURES SHALL BE LIMITED ACCORDING TO THE FOLLOWING RESTRICTIONS:
   - (a) NIGHTTIME & WEEKENDS: NO LANE CLOSURES EXCEPT AS APPROVED BY THE ENGINEER.
   - (b) NO LANE CLOSURES PERMITTED DURING THE FOLLOWING HOLIDAYS AND SPECIAL EVENT DAYS:
     - (1) DECEMBER 15 THRU JANUARY 1
     - (2) WEDNESDAY BEFORE THANKSGIVING THRU SUNDAY AFTER THANKSGIVING
     - (3) SATURDAY AND SUNDAY BEFORE MEMORIAL DAY AND LABOR DAY
     - (4) SATURDAY OR SUNDAY WHEN JULY 4 FALLS ON A FRIDAY OR MONDAY
     - (5) VETERANS DAY
     - (6) FOUNDERS DAY (GOOD FRIDAY) & JUNETEENTH
     - (7) DURING COMAL COUNTY FAIR & RODEO
9. REMOVAL AND DISPOSAL OF EXISTING ABANDONED UTILITIES (EITHER PREVIOUSLY ABANDONED OR ABANDONED DURING CONSTRUCTION) REQUIRED TO SUPPORT THIS PROJECT SHALL BE PERFORMED UNDER THE OVERALL PREPARING ROW ITEM (100 6001).
10. COORDINATE WITH ADJACENT PROJECTS.
11. COVER PERMANENT SIGNS IF NOT USED. THIS IS SUBSIDIARY TO THE BARRICADES, SIGNS AND TRAFFIC HANDLING ITEM (502-6001).
12. NO EXCAVATION WITHIN THREE (3) FEET OF AN EXISTING NEW BRAUNFELS UTILITIES (NBU) UTILITY POLE SHALL EXCEED ONE (1) FOOT IN DEPTH EXCEPT AS APPROVED BY THE ENGINEER.
13. COORDINATE WITH THE CITY OF NEW BRAUNFELS OR TXDOT FOR SIGNAL TIMING ADJUSTMENTS AS NEEDED.
14. CONTRACTOR IS NOT PERMITTED TO WORK IN AREAS WITH ONGOING UTILITY RELOCATION OR ROW ACQUISITION.
15. ADVANCE WARNING SIGNS AND LANE CLOSURES MUST BE MOVED UP PERIODICALLY TO MAINTAIN AN APPROPRIATE DISTANCE FROM THE WORK ZONE IN ACCORDANCE WITH THE APPLICABLE STANDARDS.
16. RESIDENTIAL DRIVEWAYS ARE NOT TO BE CLOSED MORE THAN 3 CONSECUTIVE DAYS. CONTRACTOR SHALL INSTALL ALL WEATHER MATERIAL TO ALLOW RESIDENTS ACCESS IF OPERATION IS LONGER THAN 3 DAYS.

B. SEQUENCE OF WORK

1. NOTIFY AFFECTED BUSINESS OWNERS 2 WEEKS PRIOR TO CONSTRUCTION AND MAINTAIN TEMPORARY ACCESS AT ALL TIMES.
2. CLOSE SIDEWALK TO PEDESTRIAN TRAFFIC, DETOUR PEDESTRIANS PER TXDOT STANDARD WZ(BTS-2)-13. SEE TCP PEDESTRIAN DETOURS SHEET FOR SIDEWALK CLOSURE NOTES AND DETAILS. SEE ADVANCE WARNING SIGN LAYOUT SHEETS.
3. AT LOCATIONS WITH EXISTING PEDESTRIAN PATH ON ONLY ONE SIDE, INSTALL NEW SIDEWALK ON SIDE WITHOUT EXISTING PATH PRIOR TO CLOSING THE SIDE WITH THE EXISTING PATH.
4. INSTALL SW3P AND TREE PROTECTION IN ACCORDANCE WITH THE PLAN (SEE SHEETS 30-37).
5. REMOVE EXISTING SIDEWALK AND ROAD MATERIAL AS SHOWN IN THE PLAN. SEE TYPICAL SECTIONS, PAVEMENT DETAILS, AND PLAN LAYOUT SHEETS FOR ADDITIONAL INFORMATION. ENSURE POSITIVE DRAINAGE AROUND INTERSECTION RETURNS. CONTRACTOR SHALL INSTALL METAL PLATE OVER OPEN TRENCHES, UNCOVERED MANHOLES, AND INLETS ADJACENT TO TRAFFIC OVERNIGHT OR WHEN NO WORK IS BEING PERFORMED. INSTALL TEMPORARY PAVEMENT MARKINGS AS NEEDED OR AS DIRECTED BY THE ENGINEER.
6. CONSTRUCT RETAINING WALL FOOTINGS AND WALLS. INSTALL DRAINAGE ELEMENTS FROM DOWNSTREAM TO UPSTREAM. ENSURE POSITIVE DRAINAGE TO EXISTING DRAINAGE STRUCTURES. ADD CONDUIT, PULL BOXES, AND CONTROL CABINETS FOR PHB SIGNALS. WORK AT EACH LOCATION MUST BE COMPLETED PER GENERAL NOTES WITHIN OFF-PEAK HOURS. CONTRACTOR SHALL COORDINATE WITH ENGINEER FOR ANY TREE ROOTS GREATER THAN 1" DIAMETER CONFLICT WITH PROPOSED FEATURES.
7. FORM SIDEWALKS, CURBS, CURB RAMPS, AND DRIVEWAYS.
8. CONSTRUCT SIDEWALKS, CURBS, CURB RAMPS, AND DRIVEWAYS.
9. OPEN COMPLETED SIDEWALK TO PEDESTRIANS AS SOON AS POSSIBLE WITH THE APPROVAL OF THE ENGINEER.
10. ADJUST PEDESTRIAN PUSH BUTTONS.
11. AFTER ALL SIDEWALK IMPROVEMENTS ARE COMPLETED FOR ALL FOUR CORNERS AT INTERSECTIONS, REMOVE EXISTING PAVEMENT MARKINGS AND INSTALL PROPOSED PAVEMENT MARKINGS.
12. INSTALL AND/OR RELOCATE PERMANENT SIGNING.
13. REMOVE ALL CONSTRUCTION DEBRIS.
14. INSTALL TOPSOIL AND SODDING.
15. REMOVE SW3P ITEMS.

C. SAFETY

1. THE CONTRACTOR WILL PROVIDE, CONSTRUCT, AND MAINTAIN BARRICADES AND SIGNS IN ACCORDANCE WITH STATE STANDARDS. ANY SIGNS REQUIRED THAT ARE NOT DETAILED IN THE STANDARD SHEETS SHALL BE IN CONFORMANCE WITH THE “TEXAS MANUAL ON UNIFORM TRAFFIC CONTROL DEVICES” AND THE “STANDARD HIGHWAY SIGN DESIGNS FOR TEXAS.”
2. BARRICADES AND WARNING SIGNS SHALL BE PLACED AS INDICATED IN THE PLANS. THIS SHALL BE CONSIDERED THE MINIMUM REQUIRED TO PROVIDE FOR THE SAFETY OF TRAFFIC DURING CONSTRUCTION. THE CONTRACTOR SHALL PROVIDE AND MAINTAIN OTHER SUCH BARRICADES AND SIGNS DEEMED NECESSARY BY THE ENGINEER OR AS WARRANTED BY FIELD CONDITIONS TO ENSURE THE SAFE PASSAGE OF TRAFFIC AT ALL TIMES.
3. THE CONTRACTOR SHALL PROVIDE AND MAINTAIN FLAGGERS AS DIRECTED AND/OR APPROVED BY THE ENGINEER, AT SUCH POINTS AND FOR SUCH PERIODS OF TIME AS MAY BE REQUIRED, TO PROVIDE FOR THE SAFETY OF THE TRAVELING PUBLIC AND THE CONTRACTOR'S PERSONNEL.
4. THE CONTRACTOR SHALL KEEP THE ROADWAY CLEAN AND FREE OF DIRT OR OTHER MATERIALS DURING HAULING OPERATIONS. IF THE CONTRACTOR DOES NOT MAINTAIN A CLEAN ROADWAY, THE ENGINEER MAY ORDER CESSATION OF ALL CONSTRUCTION OPERATIONS UNTIL THE ROADWAY IS SATISFACTORILY CLEANED.

D. EQUIPMENT, CLEAN UP, AND PAYMENT

1. THE USE OF RUBBER-TIRED EQUIPMENT WILL BE REQUIRED FOR MOVING DIRT OR OTHER MATERIALS ALONG OR ACROSS PAVEMENT SURFACES. WHERE THE CONTRACTOR DESIRES TO MOVE ANY EQUIPMENT NOT LICENSED FOR OPERATION ON PUBLIC HIGHWAYS, ON OR ACROSS PAVEMENT, THE PAVEMENT SHALL BE PROTECTED FROM DAMAGE AS DIRECTED AND/OR APPROVED BY THE ENGINEER.
2. UPON COMPLETION OF THE WORK AND BEFORE FINAL ACCEPTANCE AND FINAL PAYMENT IS MADE, THE CONTRACTOR SHALL CLEAR AND REMOVE FROM THE SITE ALL SURPLUS AND DISCARDED MATERIALS AND DEBRIS OF EVERY KIND AND LEAVE THE ENTIRE PROJECT AREA IN A SMOOTH, NEAT, AND SIGHTLY CONDITION.
3. ALL WORK ZONE PAVEMENT MARKINGS, BARRICADES, SIGNS, AND FLAGGERS SHALL BE SUBSIDIARY TO THE BARRICADES, SIGNS AND TRAFFIC HANDLING ITEM (502 6001). ALL EROSION AND SEDIMENT CONTROL DEVICES WILL BE PAID FOR UNDER THE RELATED ITEM 506 ELEMENTS. ALL OTHER WORK AND MATERIALS SHALL BE SUBSIDIARY TO THEIR RELATED BID ITEMS UNLESS OTHERWISE INDICATED IN THE PLANS.

REV	DESCRIPTION	DATE	APPR
0	ISSUED FOR BID	02/12/24	AG

TRAFFIC CONTROL PLAN NARRATIVE

COMMON STREET PEDESTRIAN IMPROVEMENTS

CITY OF NEW BRAUNFELS
550 Landa Street | New Braunfels, TX 78130

DESIGN BY: KM
DRAWN BY: EFC
CHECKED BY: JB
APPROVED BY: AG

City of New Braunfels

ENGINEER:
THE GOODMAN CORPORATION
3200 TRAVIS, SUITE 200
HOUSTON, TEXAS 77006
www.TheGoodmanCorp.com
(713) 951-7951
TBPELS Firm Registration No. 1F990

SURVEYOR:
MBCO
ENGINEERING + SURVEYING

STATE OF TEXAS
ASHISH GHOSH
111103
LICENSED
PROFESSIONAL ENGINEER
2/13/2024

DATE: 02/12/2024
SCALE: AS NOTED

W:\00_TGC Project Files\NBR100\CAD\NBR100_GENERAL.dwg, 2/12/2024

PEDESTRIAN DETOUR LOCATIONS

SIDEWALK LOCATION	FROM	TO	ACTION	DETAIL USED	NOTES
WB	LIBERTY AVE	UNION AVE	SIDEWALK CLOSED		NO EXISTING PEDESTRIAN PATH
EB	LIBERTY AVE	UNION AVE	DETOUR TO WB	SIDEWALK DETOUR	
WB	UNION AVE	CENTRAL AVE	DETOUR TO EB	SIDEWALK DETOUR	
EB	UNION AVE	CENTRAL AVE	DETOUR TO WB	SIDEWALK DETOUR	
WB	CENTRAL AVE	EAST AVE	SIDEWALK CLOSED		NO EXISTING PEDESTRIAN PATH
EB	CENTRAL AVE	EAST AVE	SIDEWALK CLOSED		NO EXISTING PEDESTRIAN PATH
WB	EAST AVE	FAIR LN	DETOUR TO EB	CROSSWALK CLOSURES	
EB	EAST AVE	FAIR LN	DETOUR TO WB	CROSSWALK CLOSURES	
WB	FAIR LN	LOOP 337	SIDEWALK CLOSED		NO EXISTING PEDESTRIAN PATH
EB	FAIR LN	LOOP 337	SIDEWALK CLOSED		NO EXISTING PEDESTRIAN PATH

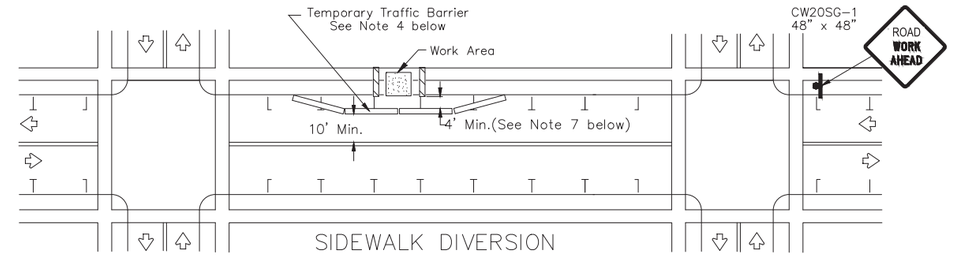

SIDEWALK DIVERSION

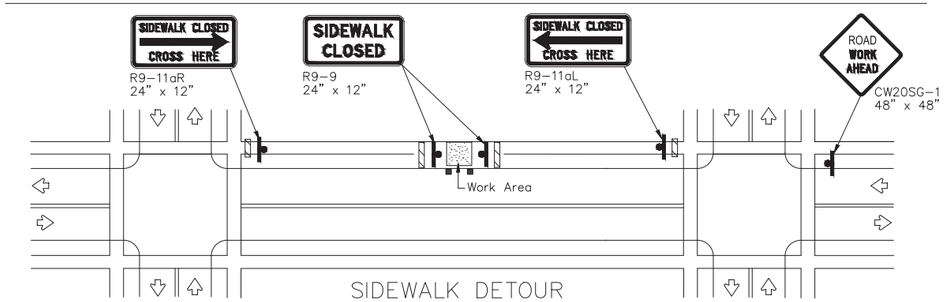

SIDEWALK DETOUR

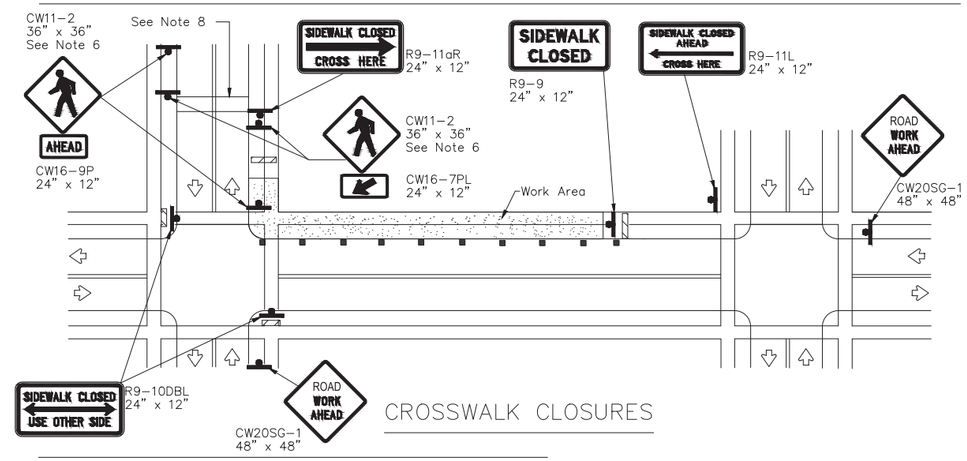

CROSSWALK CLOSURES

GENERAL NOTES FOR WORK ZONE SIGNS

1. Signs shall be installed and maintained in a straight and plumb condition.
2. Wooden sign posts shall be painted white.
3. Barricades shall NOT be used as sign supports.
4. Nails shall NOT be used to attach signs to any support.
5. All signs shall be installed in accordance with the plans or as directed by the Engineer.
6. The Contractor shall furnish the sign design shown in the plans or in the "Standard Highway Sign Designs for Texas" (SHSD).
7. The Contractor shall furnish sign supports and substrates listed in the "Compliant Work Zone Traffic Control Device List" (CWZTCD), installed as per the manufacturer's recommendations.
8. Temporary signs that have damaged or cracked substrates and/or damaged or marred reflective sheeting shall be replaced as directed by the Engineer.
9. Identification markings may be shown only on the back of the sign substrate. The maximum height of letters and/or company logos used for identification shall be 1".
10. Damaged wood posts shall be replaced. Splicing wood posts will not be allowed.

DURATION OF WORK

1. Work zone durations are defined in Part 6, Section 6G.02 of the Texas Manual on Uniform Traffic Control Devices (TMUTCD).

SIGN MOUNTING HEIGHT

1. Sign height of Long-term/Intermediate-term warning signs shall be as shown on Figure 6F-1 of the TMUTCD.
2. Sign height of Short-term/Short Duration warning signs shall be as shown on Figure 6F-2 of the TMUTCD.
3. Regulatory signs shall be mounted at least 7 feet, but not more than 9 feet, above the paved surface regardless of work duration.

REMOVING OR COVERING

1. When sign messages may be confusing or do not apply, the signs shall be removed or completely covered, unless otherwise approved by the Engineer.
2. When signs are covered, the material used shall be opaque, such as heavy mil black plastic, or other materials which will cover the entire sign face and maintain their opaque properties under automobile headlights at night without damaging the sign sheeting. Burlap, or heavy materials such as plywood or aluminum shall not be used to cover signs.
3. Duct tape or other adhesive material shall NOT be affixed to a sign face.
4. Signs and anchor stubs shall be removed and holes back filled upon completion of the work.

REFLECTIVE SHEETING

1. All signs shall be retroreflective and constructed of sheeting meeting the requirements of the DMS and color usage table shown on this sheet.

SIGN SUPPORT WEIGHTS

1. Weights used to keep signs from turning over should be sandbags filled with dry, cohesionless material.
2. The sandbags will be tied shut to keep the sand from spilling and to maintain a constant weight.
3. Rock, concrete, iron, steel or other solid objects will not be permitted for use as sign support weights.
4. Sandbags should weigh a minimum of 35 lbs and a maximum of 50 lbs.
5. Sandbags shall be made of a durable material that tears upon vehicular impact. Rubber, such as tire inner tubes, shall not be used.
6. Rubber ballasts designed for channelizing devices should not be used for ballast on portable sign supports. Sign supports designed and manufactured with rubber bases may be used when shown on the CWZTCD list.
7. Sandbags shall only be placed along or laid over the base supports of the traffic control device and shall not be suspended above ground level or hung with rope, wire, chains or other fastners. Sandbags shall be placed along the length of the skids to weigh down the sign support.
8. Sandbags shall NOT be placed under the skid and shall not be used to level sign supports placed on slopes.

LEGEND	
	Sign
	Channelizing Devices
	Type 3 Barricade

DEPARTMENTAL MATERIAL SPECIFICATIONS	
SIGN FACE MATERIALS	DMS-8300
FLEXIBLE ROLL-UP REFLECTIVE SIGNS	DMS-8310

COLOR	USAGE	SHEETING MATERIAL
ORANGE	BACKGROUND	TYPE B_{FL} OR TYPE C_{FL} SHEETING
WHITE	BACKGROUND	TYPE A SHEETING
BLACK	LEGEND & BORDERS	ACRYLIC NON-REFLECTIVE SHEETING

Only pre-qualified products shall be used. A copy of the "Compliant Work Zone Traffic Control Devices List" (CWZTCD) describes pre-qualified products and their sources and may be found at the following web address:
http://www.txdot.gov/txdot_library/publications/construction.htm

PEDESTRIAN CONTROL

1. Holes, trenches or other hazards shall be adequately protected by covering, delineating or surrounding the hazard with orange plastic pedestrian fencing or longitudinal channelizing devices, or as directed by the Engineer.
2. "CROSSWALK CLOSURES" as detailed above will require the Engineer's approval prior to installation.
3. R9 series signs shown may be placed on supports detailed on the BC standards or CWZTCD list, or when fabricated from approved lightweight plastic substrates, they may be mounted on top of a plastic drum at or near the location shown.
4. For speeds less than 45 mph longitudinal channelizing devices may be used instead of traffic barriers when approved by the Engineer. Attenuation of blunt ends and installation of water filled devices shall be as per BC(9) and manufacturer's recommendations.
5. Location of devices are for general guidance. Actual device spacing and location must be field adjusted to meet actual conditions.
6. Where pedestrians with visual disabilities normally use the closed sidewalk Detectable Pedestrian Barricades should be used instead of the Type 3 Barricades shown.
7. The width of existing sidewalk should be maintained if practical.
8. Pavement markings for mid-block crosswalks shall be paid for under the appropriate bid items.
9. When crosswalks or other pedestrian facilities are closed or relocated, temporary facilities shall be detectable and shall include accessibility features consistent with the features present in the existing pedestrian facility.

REV	DESCRIPTION	DATE	APPR
0	ISSUED FOR BID	02/12/24	AG

TRAFFIC CONTROL PLAN
PEDESTRIAN DETOURS

COMMON STREET PEDESTRIAN IMPROVEMENTS

CITY OF NEW BRAUNFELS
550 Landa Street | New Braunfels, TX 78130

DESIGN BY: KM
DRAWN BY: EFC
CHECKED BY: JB
APPROVED BY: AG

City of New Braunfels

ENGINEER:
THE GOODMAN CORPORATION
3200 TRAVIS, SUITE 200
HOUSTON, TEXAS 77006
www.TheGoodmanCorp.com
(713) 951-7951
TBPELS Firm Registration No. 19990

SURVEYOR:
MBCO ENGINEERING + SURVEYING

STATE OF TEXAS
ASHISH GHOSH
111103
LICENSED
PROFESSIONAL ENGINEER
2/13/2024

DATE: 02/12/2024
SCALE: AS NOTED

SHEET NUMBER
7 OF 97

W:\00_TGC Project Files\NBR100\CAD\NBR100_GENERAL.dwg, 2/12/2024

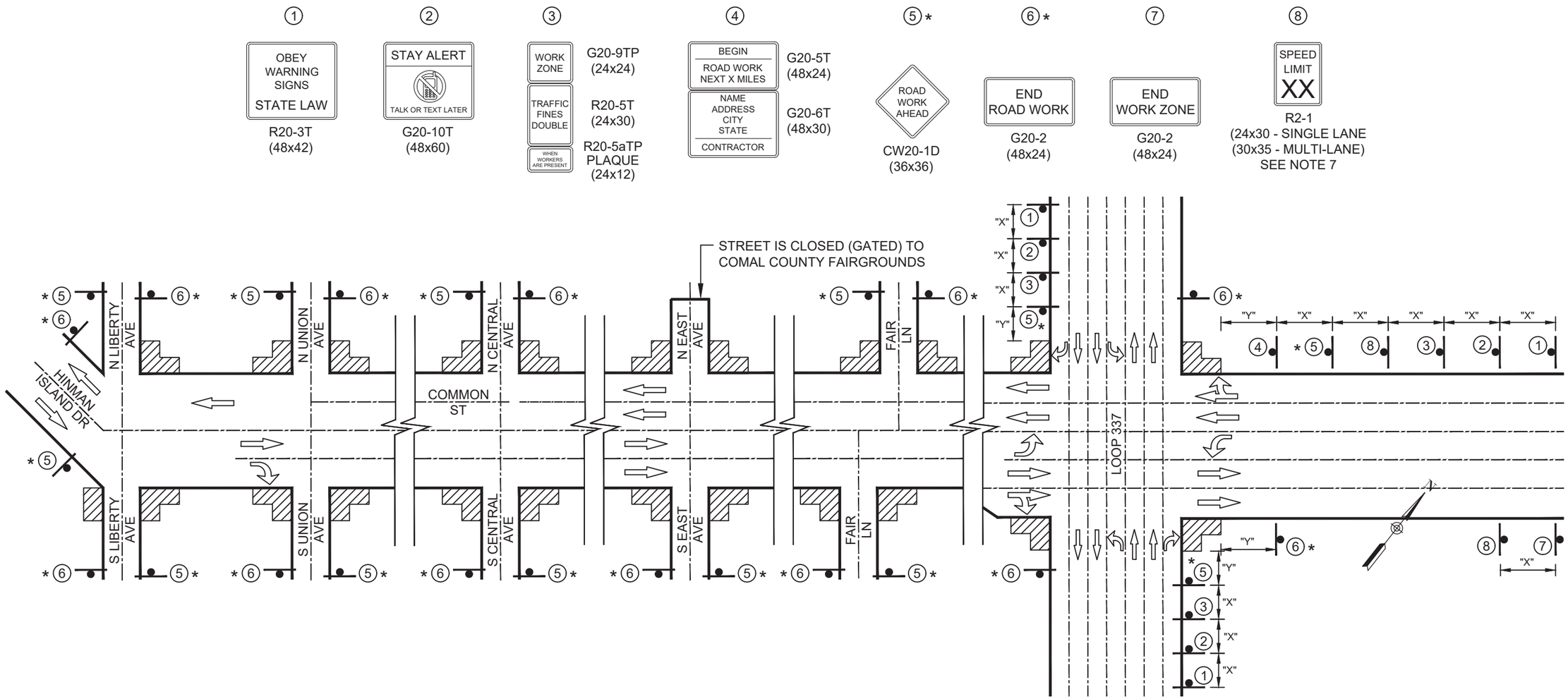

COMMON ST FROM LIBERTY AVE TO LOOP 337

SHEETS 38 - 45, REFER TO TCP (1-1a) FOR ADDITIONAL INFORMATION

LEGEND

- CONSTRUCTION WARNING SIGN
- TRAFFIC FLOW
- WORK ZONE

POSTED SPEED	LONGITUDINAL BUFFER SPACE "Y" DISTANCE
MPH	FT (APPROX)
30	90
35	120
40	155
45	195
50	240
55	295
60	350
65	410
70	475

NOTES:

1. CONTRACTOR SHALL PLACE ADVANCE WARNING SIGNS ACCORDING TO DISTANCE "X" ON STANDARD BC(2)-21.
2. CONTRACTOR SHALL FIELD VERIFY POSTED SPEED FOR "X" SPACING.
3. SIGN LOCATIONS MAY BE ADJUSTED DUE TO CONDITIONS AS APPROVED BY THE ENGINEER.
4. CONFLICTING SIGNS SHALL BE COVERED BY CONTRACTOR OR AS DIRECTED BY THE ENGINEER.
5. SIGNS SHOWN SHALL BE COORDINATED WITH SPECIFIC WORK TRAFFIC CONTROL DETAILS INCLUDED IN THE PLANS.
6. SIGNS 5 & 6 TO BE MOVED AND PLACED ONLY IN ADVANCE OF WHERE WORK IS BEING PERFORMED.
7. SIGN 8 SHALL DISPLAY APPROPRIATE SPEED LIMIT PLACE OF "XX".

REV	DESCRIPTION	DATE	APPR
0	ISSUED FOR BID	02/12/24	AG

TRAFFIC CONTROL PLAN
ADVANCED WARNING DEVICES

COMMON STREET PEDESTRIAN IMPROVEMENTS

CITY OF NEW BRAUNFELS
550 Landa Street | New Braunfels, TX 78130

DESIGN BY: KM
DRAWN BY: EFC
CHECKED BY: JB
APPROVED BY: AG

City of New Braunfels

ENGINEER:
THE GOODMAN CORPORATION
3200 TRAVIS, SUITE 200
HOUSTON, TEXAS 77006
www.TheGoodmanCorp.com
(713) 951-7951
TBPELS Firm Registration No. 19990

SURVEYOR:
MBCO ENGINEERING + SURVEYING

STATE OF TEXAS
ASHISH GHOSH
111103
LICENSED
PROFESSIONAL ENGINEER
2/13/2024

DATE: 02/12/2024
SCALE: AS NOTED

SHEET NUMBER
8 OF 97

W:\00_TGC Project Files\NBR100\CAD\NBR100_GENERAL.dwg, 2/12/2024

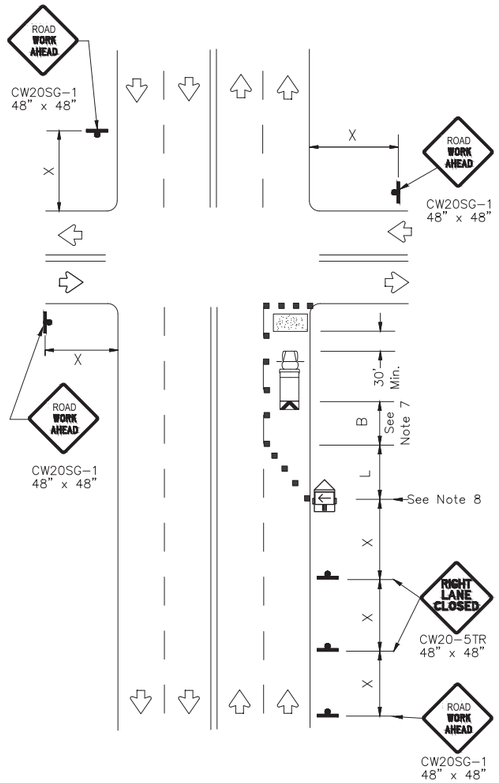

NEAR SIDE LANE CLOSURE

SHORT DURATION OR SHORT TERM STATIONARY

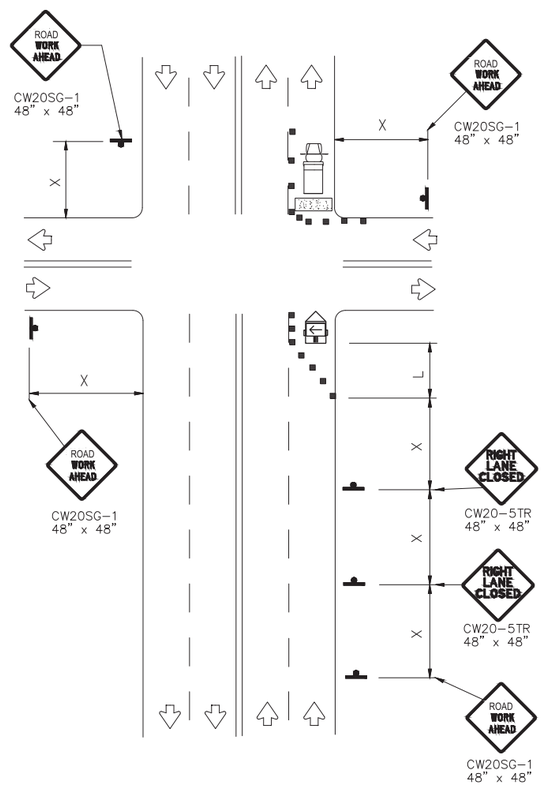

FAR SIDE RIGHT LANE CLOSURE

SHORT DURATION OR SHORT TERM STATIONARY

LEGEND			
	Type 3 Barricade		Channelizing Devices
	Heavy Work Vehicle		Truck Mounted Attenuator (TMA)
	Trailer Mounted Flashing Arrow Board		Portable Changeable Message Sign (PCMS)
	Sign		Traffic Flow
	Flag		Flagger

Posted Speed *	Formula	Minimum Desirable Taper Lengths **			Suggested Maximum Spacing of Channelizing Devices		Minimum Sign Spacing "X" Distance	Suggested Longitudinal Buffer Space "B"
		10' Offset	11' Offset	12' Offset	On a Taper	On a Tangent		
30	$L = \frac{WS^2}{60}$	150'	165'	180'	30'	60'	120'	90'
35		205'	225'	245'	35'	70'	160'	120'
40		265'	295'	320'	40'	80'	240'	155'
45	L=WS	450'	495'	540'	45'	90'	320'	195'
50		500'	550'	600'	50'	100'	400'	240'
55		550'	605'	660'	55'	110'	500'	295'
60		600'	660'	720'	60'	120'	600'	350'
65		650'	715'	780'	65'	130'	700'	410'
70		700'	770'	840'	70'	140'	800'	475'
75		750'	825'	900'	75'	150'	900'	540'

* Conventional Roads Only

** Taper lengths have been rounded off.
L=Length of Taper(FT) W=Width of Offset(FT) S=Posted Speed(MPH)

WORKERS IN BUCKET TRUCKS SHALL NOT WORK ABOVE OPEN LANES OF TRAFFIC.

GENERAL NOTES

1. The minimum size channelizing device is the 28" cone. 42" Two-piece cones, drums, vertical panels or barricades will be required when the device must be left unattended at night.
2. Obstructions or hazards at the work area shall be clearly marked and delineated at all times.
3. Flaggers and Flagger Symbol (CW20-7) signs may be required according to field conditions.
4. Vehicles parked in roadway shall be equipped with at least two high intensity rotating, flashing, oscillating or strobe type lights.
5. High level warning devices (flag trees) may be used at corners of the vehicle.
6. When work operations are performed on existing signals, the signals may be placed in flashing red mode when approved by the engineer. If existing signals do not have power, All-Way Stop (R1-1 and R1-3P) signs may be implemented when approved by the engineer.
7. For Short-Term Stationary work the buffer space "B" from the above table should be used if field conditions permit. For Short Duration (less than 1 hour) any buffer space provided will enhance the safety of the setup.
8. The arrow board at this location may be omitted for Short Duration work if the work vehicle has an arrow board in operation. As an option, the arrow board may be placed at the end of the taper in the closed lane if space is not available at the beginning of the taper.
9. Signs and devices for the NEAR SIDE LANE CLOSURE may be altered for a left lane closure by using a LEFT LANE CLOSED (CW20-5TL) and adding channelizing devices on the centerline to protect the work space from opposing traffic.

REV	DESCRIPTION	DATE	APPR
0	ISSUED FOR BID	02/12/24	AG

TRAFFIC CONTROL PLAN
LANE CLOSURES

COMMON STREET PEDESTRIAN IMPROVEMENTS

CITY OF NEW BRAUNFELS
550 Landa Street | New Braunfels, TX 78130

DESIGN BY: KM
DRAWN BY: EFC
CHECKED BY: JB
APPROVED BY: AG

City of New Braunfels

ENGINEER:
THE GOODMAN CORPORATION
3200 TRAVIS, SUITE 200
HOUSTON, TEXAS 77006
www.TheGoodmanCorp.com
(713) 951-7951
TBPELS Firm Registration No. 19990

SURVEYOR:
MBCO
ENGINEERING + SURVEYING

STATE OF TEXAS
ASHISH GHOSH
111103
LICENSED
PROFESSIONAL ENGINEER
2/13/2024

DATE: 02/12/2024
SCALE: AS NOTED

SHEET NUMBER
9 OF 97

W:\00_TGC Project Files\NBR100\CAD\NBR100_GENERAL.dwg, 2/12/2024

TRAFFIC CONTROL PLAN ITEMS

LOCATION	PROJECT LIMITING SIGNS												
	ROAD WORK AHEAD	END ROAD WORK	ROAD WORK NEXT X MILES / NEXT X MILES	ROAD WORK NEXT MILES	END WORK ZONE	BEGIN ROAD WORK NEXT X MILES	NAME ADDRESS CITY STATE CONTRACTOR	BEGIN WORK ZONE	STAY ALERT TALK OR TEXT LATER	OBEY WARNING SIGNS STATE LAW	TRAFFIC FINES DOUBLE	WHEN WORKERS ARE PRESENT	SPEED LIMIT XX
	CW20-1D (36x36)	G20-2 (48x24)	G20-IaT (72x36)	G20-IT (72x24)	G20-2bT (48x24)	G20-5T (48x24)	G20-6T (48x30)	G20-9TP (24x24)	G20-10T (48x60)	R20-3T (48x42)	R20-5T (24x30)	R20-5aTP (24x12)	R2-1 (24x12)
1	X					X	X	X	X	X	X	X	X
2		X			X								
3	X		X	X									

TRAFFIC CONTROL PLAN ITEMS (CONTINUED)

LOCATION	PEDESTRIAN SIGNING						PED DEVICE
	SIDEWALK CLOSED	SIDEWALK CLOSED USE OTHER SIDE	SIDEWALK CLOSED CROSS HERE			AHEAD	
	R9-9 (24x12)	R9-10DBL (24x12)	R9-11aR/L (24x12)	CW11-2 (36x36)	CW16-7PR/L (24x12)	CW16-9P (24x12)	PEDESTRIAN BARRICADE
1							
2							
3	X	X	X	X	X	X	X

TRAFFIC CONTROL PLAN ITEMS (CONTINUED)

LOCATION	PHASE SIGNING																				
		LEFT LANE ENDS	LANE ENDS MERGE LEFT	SHOULDER ENDS	ROAD WORK 1 MILE	ROAD WORK ½ MILE	ROAD WORK 1500 FT	ROAD WORK 1000 FT	ROAD WORK 500 FT	LEFT LANE CLOSED	1000FT	½ MILE	TRUCKS ENTERING ROADWAY	DRIVEWAY	BUSINESS NAME	STOP	YIELD		ENTER	ONE WAY	
	CW3-2 (36x36)	CW9-1 L OR R (30x30)	CW9-2 L OR R (30x30)	CW14-4T (36x36)	CW20-1A (36x36)	CW20-2D (36x36)	CW20-1A (36x36)	CW20-1B (36x36)	CW20-1C (36x36)	CW20-5 L OR R (36x36)	CW16-3aP (30x12)	CW16-3aP (30x12)	CW27-1T (48x48)	D70A (24x12)	M4-3 (24x12)	R1-1 (36x36)	R1-2 (36x36x36)	R3-2 (36x36)	R5-1 (36x36)	R6-1 L OR R (54x18)	R8-3 (30x30)
1		X	X	X	X	X	X	X	X	X	X	X									
2																					
3	X	X	X	X	X	X	X	X	X	X	X	X	X	X	X	X	X	X	X	X	X

TRAFFIC CONTROL PLAN ITEMS (CONTINUED)

LOCATION	PHASE DEVICES						
	M						
	P.C.M.S.	ARROW BOARD	TY III BARRICADE	CW1-8 (F)	VP (F) IR, L	PLASTIC DRUM	CONE (>36")
1							
2							
3	X	X	X	X	X	X	X

GENERAL NOTES - BARRICADES:

LOCATION NO. 1 TO BE USED AT BEGINNING OF WORK ZONE.

LOCATION NO. 2 TO BE USED AT THE END OF WORK ZONE.

LOCATION NO. 3 TO BE USED FOR TEMP DETOURS THROUGHOUT THE COURSE OF THE PROJECT AS DIRECTED BY THE ENGINEER.

NOTES:

1. CERTAIN SIGNS MUST BE USED IN CONJUNCTION WITH OTHER SIGNS. EXAMPLE: "FLAGGER AHEAD" MUST HAVE A "BE PREPARED TO STOP".
2. BARRICADES AND WARNING SIGNS ON THIS SHEET ARE THE MINIMUM CONSTRUCTION ZONE. SIGNING, ADDITIONAL BARRICADES, WARNING SIGNS, ARROW PANELS, CONES, ETC. REQUIRED IN ACCORDANCE WITH CURRENT BC STANDARDS AND THE TEXAS MUTCD MAY BE REQUIRED IN AREAS OF ACTUAL CONSTRUCTION.
3. A DISTANCE PLAQUE IN FEET OR MILES MAY BE REQUIRED FOR USE IN CONJUNCTION WITH WARNING SIGNS.

REV	DESCRIPTION	DATE	APPR
0	ISSUED FOR BID	02/12/24	AG

TRAFFIC CONTROL PLAN
ADVANCED WARNING DEVICES

COMMON STREET PEDESTRIAN IMPROVEMENTS

CITY OF NEW BRAUNFELS
550 Landa Street | New Braunfels, TX 78130

DESIGN BY: KM
DRAWN BY: EFC
CHECKED BY: JB
APPROVED BY: AG

City of New Braunfels

ENGINEER:
THE GOODMAN CORPORATION
3200 TRAVIS, SUITE 200
HOUSTON, TEXAS 77006
www.TheGoodmanCorp.com
(713) 951-7951
TBPELS Firm Registration No. 19990

SURVEYOR:
MBCO ENGINEERING + SURVEYING

STATE OF TEXAS
ASHISH GHOSH
111103
LICENSED
PROFESSIONAL ENGINEER
2/13/2024

DATE: 02/12/2024
SCALE: AS NOTED

SHEET NUMBER
10 OF 97

W:\00_TGC Project Files\MBR100\CAD\MBR100_GENERAL.dwg, 2/12/2024

BARRICADE AND CONSTRUCTION (BC) STANDARD SHEETS GENERAL NOTES:

1. The Barricade and Construction Standard Sheets (BC sheets) are intended to show typical examples for placement of temporary traffic control devices, construction pavement markings, and typical work zone signs. The information contained in these sheets meet or exceed the requirements shown in the "Texas Manual on Uniform Traffic Control Devices" (TMUTCD).

2. The development and design of the Traffic Control Plan (TCP)is the responsibility of the Engineer.

3. The Contractor may propose changes to the TCP that are signed and sealed by a licensed professional engineer for approval. The Engineer may develop, sign and seal Contractor proposed changes.

4. The Contractor is responsible for installing and maintaining the traffic control devices as shown in the plans. The Contractor may not move or change the approximate location of any device without the approval of the Engineer.

5. Geometric design of lane shifts and detours should, when possible, meet the applicable design criteria contained in manuals such as the American Association of State Highway and Transportation Officials (AASHTO), "A Policy on Geometric Design of Highways and Streets," the TxDOT "Roadway Design Manual" or engineering judgment.

6. When projects abut, the Engineer(s) may omit the END ROAD WORK, TRAFFIC FINES DOUBLE, and other advance warning signs if the signing would be redundant and the work areas appear continuous to the motorists. If the adjacent project is completed first, the Contractor shall erect the necessary warning signs as shown on these sheets, the TCP sheets or as directed by the Engineer. The BEGIN ROAD WORK NEXT X MILES sign shall be revised to show appropriate work zone distance.

7. The Engineer may require duplicate warning signs on the median side of divided highways where median width will permit and traffic volumes justify the signing.

8. All signs shall be constructed in accordance with the details found in the "Standard Highway Sign Designs for Texas," latest edition. Sign details not shown in this manual shall be shown in the plans or the Engineer shall provide a detail to the Contractor before the sign is manufactured.

9. The temporary traffic control devices shown in the illustrations of the BC sheets are examples. As necessary, the Engineer will determine the most appropriate traffic control devices to be used.

10. Where highway construction or maintenance work is being undertaken, other than mobile operations as defined by the Texas Manual on Uniform Traffic Control Devices, CSJ limit signs are required. CSJ limit signs are shown on BC(2). The OBEY WARNING SIGNS STATE LAW sign, STAY ALERT TALK OR TEXT LATER and the WORK ZONE TRAFFIC FINES DOUBLE sign with plaque shall be erected in advance of the CSJ limits. The BEGIN ROAD WORK NEXT X MILES, CONTRACTOR and END ROAD WORK signs shall be erected at or near the CSJ limits. For mobile operations, CSJ limit signs are not required.

11. Traffic control devices should be in place only while work is actually in progress or a definite need exists.

12. The Engineer has the final decision on the location of all traffic control devices.

13. Inactive equipment and work vehicles, including workers' private vehicles must be parked away from travel lanes. They should be as close to the right-of-way line as possible, or located behind a barrier or guardrail, or as approved by the Engineer.

WORKER SAFETY NOTES:

1. Workers on foot who are exposed to traffic or to construction equipment within the right-of-way shall wear high-visibility safety apparel meeting the requirements of ISEA "American National Standard for High-Visibility Apparel," or equivalent revisions, and labeled as ANSI 107-2004 standard performance for Class 2 or 3 risk exposure. Class 3 garments should be considered for high traffic volume work areas or night time work.

2. Except in emergency situations, flagger stations shall be illuminated when flagging is used at night.

COMPLIANT WORKZONE TRAFFIC CONTROL DEVICES

1. Only pre-qualified products shall be used. The "Compliant Work Zone Traffic Control Devices List" (CWZTCD) describes pre-qualified products and their sources.
2. Work zone traffic control devices shall be compliant with the Manual for Assessing safety Hardware (MASH).

THE DOCUMENTS BELOW CAN BE FOUND ON-LINE AT http://www.txdot.gov
COMPLIANT WORK ZONE TRAFFIC CONTROL DEVICES LIST (CWZTCD)
DEPARTMENTAL MATERIAL SPECIFICATIONS (DMS)
MATERIAL PRODUCER LIST (MPL)
ROADWAY DESIGN MANUAL - SEE "MANUALS (ONLINE MANUALS)"
STANDARD HIGHWAY SIGN DESIGNS FOR TEXAS (SHSD)
TEXAS MANUAL ON UNIFORM TRAFFIC CONTROL DEVICES (TMUTCD)
TRAFFIC ENGINEERING STANDARD SHEETS

DISCLAIMER: The use of this standard is governed by the "Texas Engineering Practice Act". No warranty of any kind is made by TxDOT for any purpose whatsoever. TxDOT assumes no responsibility for the conversion of this standard to other formats or for incorrect results or damages resulting from its use.

DATE: 2/8/2024
FILE: W:\00_TGC Project Files\NBR100\CAD\NBR100_GENERAL.dwg

SHEET 1 OF 12

Texas Department of Transportation — Traffic Safety Division Standard

BARRICADE AND CONSTRUCTION GENERAL NOTES AND REQUIREMENTS

BC(1)-21

FILE: bc-21.dgn	DN: TxDOT	CK: TxDOT	DW: TxDOT	CK: TxDOT
©TxDOT November 2002	CONT	SECT	JOB	HIGHWAY
REVISIONS			SAT	COMAL
4-03 7-13	DIST		COUNTY	SHEET NO.
9-07 8-14				
5-10 5-21				11 OF 97

95

DISCLAIMER: The use of this standard is governed by the "Texas Engineering Practice Act". No warranty of any kind is made by TxDOT for any purpose whatsoever. TxDOT assumes no responsibility for the conversion of this standard to other formats or for incorrect results or damages resulting from its use.

TYPICAL LOCATION OF CROSSROAD SIGNS

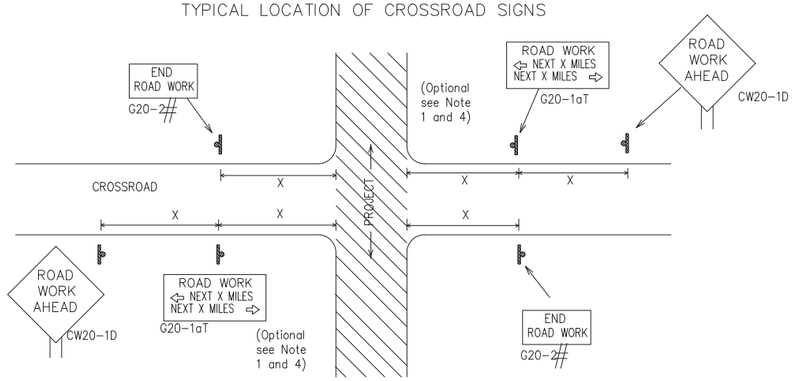

May be mounted on back of "ROAD WORK AHEAD"(CW20-1D) sign with approval of Engineer. (See note 2 below)

1. The typical minimum signing on a crossroad approach should be a "ROAD WORK AHEAD" (CW20-1D)sign and a (G20-2) "END ROAD WORK" sign, unless noted otherwise in plans.
2. The Engineer may use the reduced size 36" x 36" ROAD WORK AHEAD (CW20-1D) sign mounted back to back with the reduced size 36" x 18" "END ROAD WORK"(G20-2) sign on low volume crossroads (see Note 4 under "Typical Construction Warning Sign Size and Spacing"). See the "Standard Highway Sign Designs for Texas" manual for sign details. The Engineer may omit the advance warning signs on low volume crossroads. The Engineer will determine whether a road is low volume as per TMUTCD Part 5. This information shall be shown in the plans.
3. Based on existing field conditions, the Engineer/Inspector may require additional signs such as FLAGGER AHEAD, LOOSE GRAVEL, or other appropriate signs. When additional signs are required, these signs will be considered part of the minimum requirements. The Engineer/Inspector will determine the proper location and spacing of any sign not shown on the BC sheets, Traffic Control Plan sheets or the Work Zone Standard Sheets.
4. The "ROAD WORK NEXT X MILES"(G20-1aT)sign shall be required at high volume crossroads to advise motorists of the length of construction in either direction from the intersection. The Engineer will determine whether a roadway is considered high volume.
5. Additional traffic control devices may be shown elsewhere in the plans for higher volume crossroads.
6. When work occurs in the intersection area, appropriate traffic control devices, as shown elsewhere in the plans or as determined by the Engineer/Inspector, shall be in place.

T-INTERSECTION

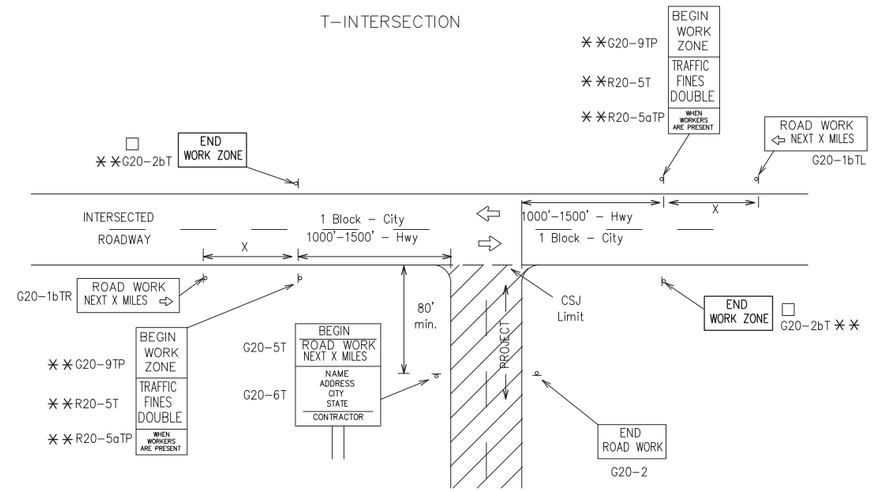

CSJ LIMITS AT T-INTERSECTION

1. The Engineer will determine the types and location of any additional traffic control devices, such as a flagger and accompanying signs, or other signs, that should be used when work is being performed at or near an intersection.
2. If construction closes the road at a T-intersection, the Contractor shall place the "CONTRACTOR NAME"(G20-6T) sign behind the Type 3 Barricades for the road closure (see BC(10) also). The "ROAD WORK NEXT X MILES" left arrow(G20-1bTL) and "ROAD WORK NEXT X MILES" right arrow (G20-1bTR)" signs shall be replaced by the detour signing called for in the plans.

TYPICAL CONSTRUCTION WARNING SIGN SIZE AND SPACING 1,5,6

SIZE

Sign Number or Series	Conventional Road	Expressway/ Freeway
CW20[4] CW21 CW22 CW23 CW25	48" x 48"	48" x 48"
CW1, CW2, CW7, CW8, CW9, CW11, CW14	36" x 36"	48" x 48"
CW3, CW4, CW5, CW6, CW8-3, CW10, CW12	48" x 48"	48" x 48"

SPACING

Posted Speed	Sign Spacing "X"
MPH	Feet (Apprx.)
30	120
35	160
40	240
45	320
50	400
55	500 [2]
60	600 [2]
65	700 [2]
70	800 [2]
75	900 [2]
80	1000 [2]
*	* [3]

* For typical sign spacings on divided highways, expressways and freeways, see Part 6 of the "Texas Manual on Uniform Traffic Control Devices" (TMUTCD) typical application diagrams or TCP Standard Sheets.

Minimum distance from work area to first Advance Warning sign nearest the work area and/or distance between each additional sign.

GENERAL NOTES

1. Special or larger size signs may be used as necessary.
2. Distance between signs should be increased as required to have 1500 feet advance warning.
3. Distance between signs should be increased as required to have 1/2 mile or more advance warning.
4. 36" x 36" "ROAD WORK AHEAD" (CW20-1D)signs may be used on low volume crossroads at the discretion of the Engineer as per TMUTCD Part 5. See Note 2 under "Typical Location of Crossroad Signs".
5. Only diamond shaped warning sign sizes are indicated.
6. See sign size listing in "TMUTCD", Sign Appendix or the "Standard Highway Sign Designs for Texas" manual for complete list of available sign design sizes.

WORK AREAS IN MULTIPLE LOCATIONS WITHIN CSJ LIMITS

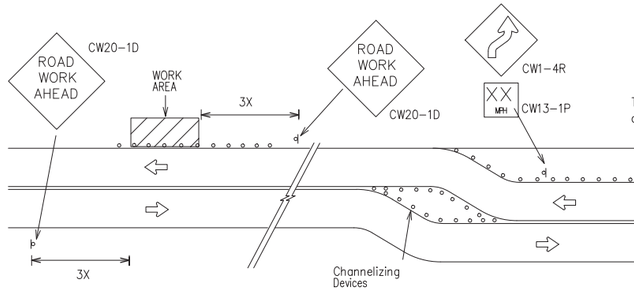

When extended distances occur between minimal work spaces, the Engineer/Inspector should ensure additional "ROAD WORK AHEAD"(CW20-1D)signs are placed in advance of these work areas to remind drivers they are still within the project limits. See the applicable TCP sheets for exact location and spacing of signs and channelizing devices.

SAMPLE LAYOUT OF SIGNING FOR WORK BEGINNING AT THE CSJ LIMITS

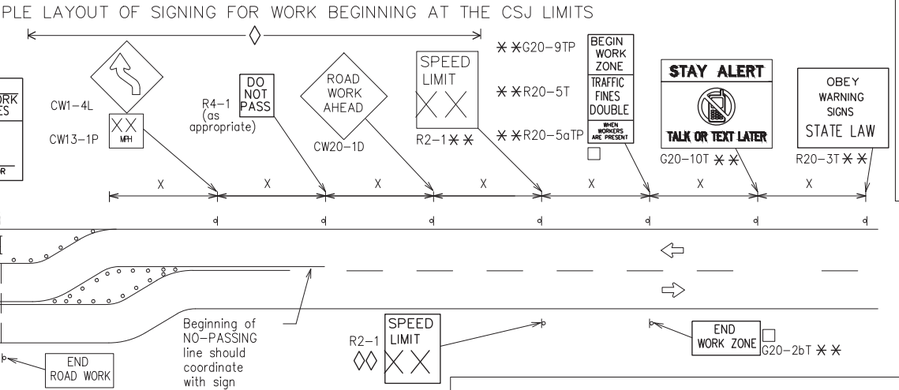

SAMPLE LAYOUT OF SIGNING FOR WORK BEGINNING DOWNSTREAM OF THE CSJ LIMITS

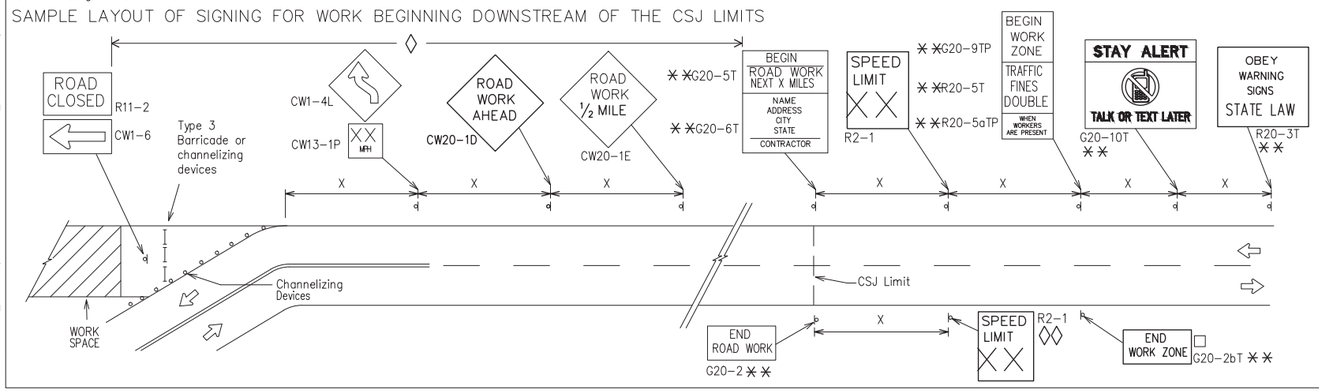

NOTES

The Contractor shall determine the appropriate distance to be placed on the G20-1 series signs and "BEGIN ROAD WORK NEXT X MILES"(G20-5T)sign for each specific project. This distance shall replace the "X" and shall be rounded to the nearest whole mile with the approval of the Engineer. No decimals shall be used.

☐ The "BEGIN WORK ZONE"(G20-9TP) and "END WORK ZONE" (G20-2bT) shall be used as shown on the sample layout when advance signs are required outside the CSJ Limits. They inform the motorist of entering or leaving a part of the work zone lying outside the CSJ Limits where traffic fines may double if workers are present.

✱✱ CSJ limit signing is required for highway construction and maintenance work, with the exception of mobile operations.

◊ Area for placement of "ROAD WORK AHEAD" (CW20-1D)sign and other signs or devices as called for on the Traffic Control Plan.

◊◊ Contractor will install a regulatory speed limit sign at the end of the work zone.

LEGEND

⊢⊣	Type 3 Barricade
○ ○ ○	Channelizing Devices
▬	Sign
X	See Typical Construction Warning Sign Size and Spacing chart or the TMUTCD for sign spacing requirements.

SHEET 2 OF 12

Texas Department of Transportation — Traffic Safety Division Standard

BARRICADE AND CONSTRUCTION PROJECT LIMIT

BC(2)-21

FILE: bc-21.dgn	DN: TxDOT	CK: TxDOT	DW: TxDOT	CK: TxDOT
©TxDOT November 2002	CONT	SECT	JOB	HIGHWAY
REVISIONS			SAT	COMAL
9-07 8-14	DIST		COUNTY	SHEET NO.
7-13 5-21				12 OF 97

DATE: 2/8/2024
FILE: W:\00_TGC Project Files\NBR100\CAD\NBR100_GENERAL.dwg

TYPICAL APPLICATION OF WORK ZONE SPEED LIMIT SIGNS

Work zone speed limits shall be regulatory, established in accordance with the "Procedures for Establishing Speed Zones," and approved by the Texas Transportation Commission, or by City Ordinance when within Incorporated City Limits.

Reduced speeds should only be posted in the vicinity of work activity and not throughout the entire project.

Regulatory work zone speed signs (R2-1) shall be removed or covered during periods when they are not needed.

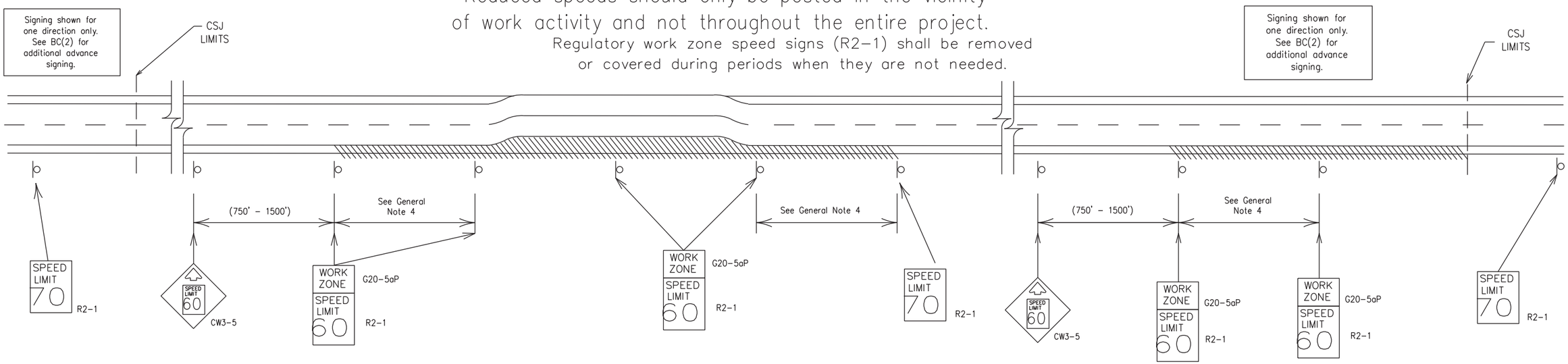

GUIDANCE FOR USE:

LONG/INTERMEDIATE TERM WORK ZONE SPEED LIMITS

This type of work zone speed limit should be included on the design of the traffic control plans when restricted geometrics with a lower design speed are present in the work zone and modification of the geometrics to a higher design speed is not feasible.

Long/Intermediate Term Work Zone Speed Limit signs, when approved as described above, should be posted and visible to the motorist when work activity is present. Work activity may also be defined as a change in the roadway that requires a reduced speed for motorists to safely negotiate the work area, including:

a) rough road or damaged pavement surface
b) substantial alteration of roadway geometrics (diversions)
c) construction detours
d) grade
e) width
f) other conditions readily apparent to the driver

As long as any of these conditions exist, the work zone speed limit signs should remain in place.

SHORT TERM WORK ZONE SPEED LIMITS

This type of work zone speed limit may be included on the design of the traffic control plans when workers or equipment are not behind concrete barrier, when work activity is within 10 feet of the traveled way or actually in the traveled way.

Short Term Work Zone Speed Limit signs should be posted and visible to the motorists only when work activity is present. When work activity is not present, signs shall be removed or covered.
(See Removing or Covering on BC(4)).

GENERAL NOTES

1. Regulatory work zone speed limits should be used only for sections of construction projects where speed control is of major importance.
2. Regulatory work zone speed limit signs shall be placed on supports at a 7 foot minimum mounting height.
3. Speed zone signs are illustrated for one direction of travel and are normally posted for each direction of travel.
4. Frequency of work zone speed limit signs should be:
   40 mph and greater 0.2 to 2 miles
   35 mph and less 0.2 to 1 mile
5. Regulatory speed limit signs shall have black legend and border on a white reflective background (See "Reflective Sheeting" on BC(4)).
6. Fabrication, erection and maintenance of the"ADVANCE SPEED LIMIT"(CW3-5)sign, "WORK ZONE"(G20-5aP) plaque and the "SPEED LIMIT"(R2-1)signs shall not be paid for directly, but shall be considered subsidiary to Item 502.
7. Turning signs from view, laying signs over or down will not be allowed, unless as otherwise noted under "REMOVING OR COVERING" on BC(4).
8. Techniques that may help reduce traffic speeds include but are not limited to:
   A. Law enforcement.
   B. Flagger stationed next to sign.
   C. Portable changeable message sign (PCMS).
   D. Low-power (drone) radar transmitter.
   E. Speed monitor trailers or signs.
9. Speeds shown on details above are for illustration only. Work Zone Speed Limits should only be posted as approved for each project.
10. For more specific guidance concerning the type of work, work zone conditions and factors impacting allowable regulatory construction speed zone reduction see TxDOT form #1204 in the TxDOT e-form system.

DISCLAIMER: The use of this standard is governed by the "Texas Engineering Practice Act". No warranty of any kind is made by TxDOT for any purpose whatsoever. TxDOT assumes no responsibility for the conversion of this standard to other formats or for incorrect results or damages resulting from its use.

DATE: 2/8/2024
FILE: W:\00_TGC Project Files\NBR100\CAD\NBR100_GENERAL.dwg

SHEET 3 OF 12

Texas Department of Transportation — Traffic Safety Division Standard

BARRICADE AND CONSTRUCTION
WORK ZONE SPEED LIMIT

BC(3)-21

FILE: bc-21.dgn	DN: TxDOT	CK: TxDOT	DW: TxDOT	CK: TxDOT	
©TxDOT November 2002	CONT	SECT	JOB	HIGHWAY	
REVISIONS			SAT	COMAL	
9-07 8-14	DIST		COUNTY	SHEET NO.	
7-13 5-21				13 OF 97	

97

TYPICAL MINIMUM CLEARANCES FOR LONG TERM AND INTERMEDIATE TERM SIGNS

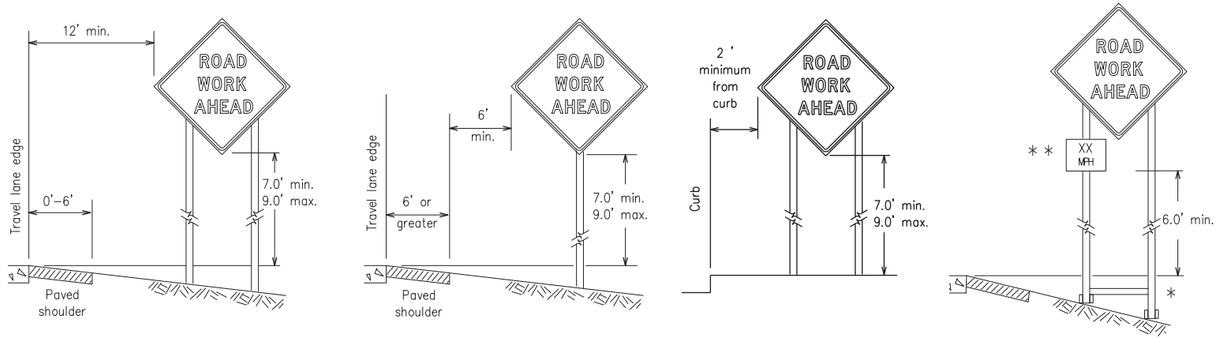

* When placing skid supports on unlevel ground, the leg post lengths must be adjusted so the sign appears straight and plumb. Objects shall NOT be placed under skids as a means of leveling.

* * When plaques are placed on dual–leg supports, they should be attached to the upright nearest the travel lane. Supplemental plaques (advisory or distance) should not cover the surface of the parent sign.

ATTACHMENT FOR SIGN SUPPORTS

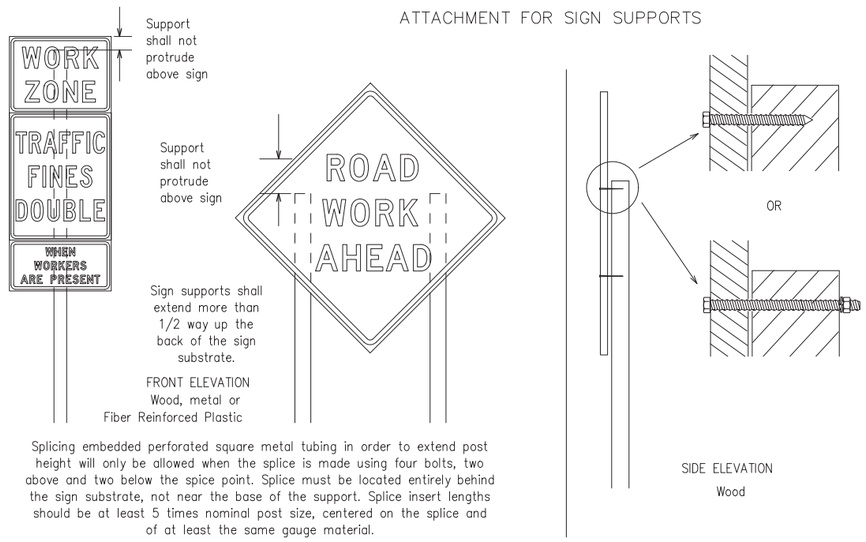

Attachment to wooden supports will be by bolts and nuts or screws. Use TxDOT's or manufacturer's recommended procedures for attaching sign substrates to other types of sign supports

Nails shall NOT be allowed.

Each sign shall be attached directly to the sign support. Multiple signs shall not be joined or spliced by any means. Wood supports shall not be extended or repaired by splicing or other means.

Splicing embedded perforated square metal tubing in order to extend post height will only be allowed when the splice is made using four bolts, two above and two below the spice point. Splice must be located entirely behind the sign substrate, not near the base of the support. Splice insert lengths should be at least 5 times nominal post size, centered on the splice and of at least the same gauge material.

STOP/SLOW PADDLES

1. STOP/SLOW paddles are the primary method to control traffic by flaggers. The STOP/SLOW paddle size should be 24" x 24".
2. STOP/SLOW paddles shall be retroreflectorized when used at night.
3. STOP/SLOW paddles may be attached to a staff with a minimum length of 6' to the bottom of the sign.
4. Any lights incorporated into the STOP or SLOW paddle faces shall only be as specifically described in Section 6E.03 Hand Signaling Devices in the TMUTCD.

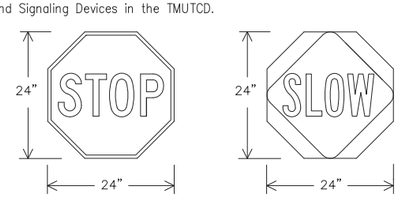

Background – Red
Legend & Border – White

Background – Orange
Legend & Border – Black

SHEETING REQUIREMENTS (WHEN USED AT NIGHT)		
USAGE	COLOR	SIGN FACE MATERIAL
BACKGROUND	RED	TYPE B OR C SHEETING
BACKGROUND	ORANGE	TYPE B_{FL} OR C_{FL} SHEETING
LEGEND & BORDER	WHITE	TYPE B OR C SHEETING
LEGEND & BORDER	BLACK	ACRYLIC NON–REFLECTIVE FILM

CONTRACTOR REQUIREMENTS FOR MAINTAINING PERMANENT SIGNS WITHIN THE PROJECT LIMITS

1. Permanent signs are used to give notice of traffic laws or regulations, call attention to conditions that are potentially hazardous to traffic operations, show route designations, destinations, directions, distances, services, points of interest, and other geographical, recreational, specific service (LOGO), or cultural information. Drivers proceeding through a work zone need the same, if not better route guidance as normally installed on a roadway without construction.
2. When permanent regulatory or warning signs conflict with work zone conditions, remove or cover the permanent signs until the permanent sign message matches the roadway condition. For details for covering large guide signs see the TS–CD standard.
3. When existing permanent signs are moved and relocated due to construction purposes, they shall be visible to motorists at all times.
4. If existing signs are to be relocated on their original supports, they shall be installed on crashworthy bases as shown on the SMD Standard sheets. The signs shall meet the required mounting heights shown on the BC Sheets or the SMD Standards. This work should be paid for under the appropriate pay item for relocating existing signs.
5. If permanent signs are to be removed and relocated using temporary supports, the Contractor shall use crashworthy supports as shown on the BC standard sheets, TLRS standard sheets or the CWZTCD list. The signs shall meet the required mounting heights shown on the BC, or the SMD standard sheets during construction. This work should be paid for under the appropriate pay item for relocating existing signs.
6. Any sign or traffic control device that is struck or damaged by the Contractor or his/her construction equipment shall be replaced as soon as possible by the Contractor to ensure proper guidance for the motorists. This will be subsidiary to Item 502.

GENERAL NOTES FOR WORK ZONE SIGNS

1. Contractor shall install and maintain signs in a straight and plumb condition and/or as directed by the Engineer.
2. Wooden sign posts shall be painted white.
3. Barricades shall NOT be used as sign supports.
4. All signs shall be installed in accordance with the plans or as directed by the Engineer. Signs shall be used to regulate, warn, and guide the traveling public safely through the work zone.
5. The Contractor may furnish either the sign design shown in the plans or in the "Standard Highway Sign Designs for Texas" (SHSD). The Engineer/Inspector may require the Contractor to furnish other work zone signs that are shown in the TMUTCD but may have been omitted from the plans. Any variation in the plans shall be documented by written agreement between the Engineer and the Contractor's Responsible Person. All changes must be documented in writing before being implemented. This can include documenting the changes in the Inspector's TxDOT diary and having both the Inspector and Contractor initial and date the agreed upon changes.
6. The Contractor shall furnish sign supports listed in the "Compliant Work Zone Traffic Control Device List" (CWZTCD) for small roadside signs. Supports for temporary large roadside signs shall meet the requirements detailed on the Temporary Large Roadside Signs (TLRS) standard sheets.The Contractor shall install the sign support in accordance with the manufacturer's recommendations. If there is a question regarding installation procedures, the Contractor shall furnish the Engineer a copy of the manufacturer's installation recommendations so the Engineer can verify the correct procedures are being followed.
7. The Contractor is responsible for installing signs on approved supports and replacing signs with damaged or cracked substrates and/or damaged or marred reflective sheeting as directed by the Engineer/Inspector.
8. Identification markings may be shown only on the back of the sign substrate. The maximum height of letters and/or company logos used for identification shall be 1 inch.
9. The Contractor shall replace damaged wood posts. New or damaged wood sign posts shall not be spliced.

DURATION OF WORK (as defined by the "Texas Manual on Uniform Traffic Control Devices" Part 6)

1. The types of sign supports, sign mounting height,the size of signs, and the type of sign substrates can vary based on the type of work being performed. The Engineer is responsible for selecting the appropriate size sign for the type of work being performed. The Contractor is responsible for ensuring the sign support, sign mounting height and substrate meets manufacturer's recommendations in regard to crashworthiness and duration of work requirements.
   a. Long–term stationary – work that occupies a location more than 3 days.
   b. Intermediate–term stationary – work that occupies a location more than one daylight period up to 3 days, or nighttime work lasting more than one hour.
   c. Short–term stationary – daytime work that occupies a location for more than 1 hour in a single daylight period.
   d. Short, duration – work that occupies a location up to 1 hour.
   e. Mobile – work that moves continuously or intermittently (stopping for up to approximately 15 minutes.)

SIGN MOUNTING HEIGHT

1. The bottom of Long–term/Intermediate–term signs shall be at least 7 feet, but not more than 9 feet, above the paved surface, except as shown for supplemental plaques mounted below other signs.
2. The bottom of Short–term/Short Duration signs shall be a minimum of 1 foot above the pavement surface but no more than 2 feet above the ground.
3. Long–term/Intermediate–term Signs may be used in lieu of Short–term/Short Duration signing.
4. Short–term/Short Duration signs shall be used only during daylight and shall be removed at the end of the workday or raised to appropriate Long–term/Intermediate sign height.
5. Regulatory signs shall be mounted at least 7 feet, but not more than 9 feet, above the paved surface regardless of work duration.

SIZE OF SIGNS

1. The Contractor shall furnish the sign sizes shown on BC (2) unless otherwise shown in the plans or as directed by the Engineer.

SIGN SUBSTRATES

1. The Contractor shall ensure the sign substrate is installed in accordance with the manufacturer's recommendations for the type of sign support that is being used. The CWZTCD lists each substrate that can be used on the different types and models of sign supports.
2. "Mesh" type materials are NOT an approved sign substrate, regardless of the tightness of the weave.
3. All wooden individual sign panels fabricated from 2 or more pieces shall have one or more plywood cleat, 1/2" thick by 6" wide, fastened to the back of the sign and extending fully across the sign. The cleat shall be attached to the back of the sign using wood screws that do not penetrate the face of the sign panel. The screws shall be placed on both sides of the splice and spaced at 6" centers. The Engineer may approve other methods of splicing the sign face.

REFLECTIVE SHEETING

1. All signs shall be retroreflective and constructed of sheeting meeting the color and retro–reflectivity requirements of DMS–8300 for rigid signs or DMS–8310 for roll–up signs. The web address for DMS specifications is shown on BC(1).
2. White sheeting, meeting the requirements of DMS–8300 Type A, shall be used for signs with a white background.
3. Orange sheeting, meeting the requirements of DMS–8300 Type B or Type C_{FL}, shall be used for rigid signs with orange backgrounds.

SIGN LETTERS

1. All sign letters and numbers shall be clear, and open rounded type uppercase alphabet letters as approved by the Federal Highway Administration (FHWA) and as published in the "Standard Highway Sign Design for Texas" manual. Signs, letters and numbers shall be of first class workmanship in accordance with Department Standards and Specifications.

REMOVING OR COVERING

1. When sign messages may be confusing or do not apply, the signs shall be removed or completely covered.
2. Long–term stationary or intermediate stationary signs installed on square metal tubing may be turned away from traffic 90 degrees when the sign message is not applicable. This technique may not be used for signs installed in the median of divided highways or near any intersections where the sign may be seen from approaching traffic.
3. Signs installed on wooden skids shall not be turned at 90 degree angles to the roadway. These signs should be removed or completely covered when not required.
4. When signs are covered, the material used shall be opaque, such as heavy mil black plastic, or other materials which will cover the entire sign face and maintain their opaque properties under automobile headlights at night, without damaging the sign sheeting.
5. Burlap shall NOT be used to cover signs.
6. Duct tape or other adhesive material shall NOT be affixed to a sign face.
7. Signs and anchor stubs shall be removed and holes backfilled upon completion of work.

SIGN SUPPORT WEIGHTS

1. Where sign supports require the use of weights to keep from turning over, the use of sandbags with dry, cohesionless sand should be used.
2. The sandbags will be tied shut to keep the sand from spilling and to maintain a constant weight.
3. Rock, concrete, iron, steel or other solid objects shall not be permitted for use as sign support weights.
4. Sandbags should weigh a minimum of 35 lbs and a maximum of 50 lbs.
5. Sandbags shall be made of a durable material that tears upon vehicular impact. Rubber (such as tire inner tubes) shall NOT be used.
6. Rubber ballasts designed for channelizing devices should not be used for ballast on portable sign supports. Sign supports designed and manufactured with rubber bases may be used when shown on the CWZTCD list.
7. Sandbags shall only be placed along or laid over the base supports of the traffic control device and shall not be suspended above ground level or hung with rope, wire, chains or other fasteners. Sandbags shall be placed along the length of the skids to weigh down the sign support.
8. Sandbags shall NOT be placed under the skid and shall not be used to level sign supports placed on slopes.

FLAGS ON SIGNS

1. Flags may be used to draw attention to warning signs. When used, the flag shall be 16 inches square or larger and shall be orange or fluorescent red–orange in color. Flags shall not be allowed to cover any portion of the sign face.

SHEET 4 OF 12

Texas Department of Transportation — Traffic Safety Division Standard

BARRICADE AND CONSTRUCTION TEMPORARY SIGN NOTES

BC(4)–21

FILE: bc–21.dgn	DN: TxDOT	CK: TxDOT	DW: TxDOT	CK: TxDOT
©TxDOT November 2002	CONT	SECT	JOB	HIGHWAY
REVISIONS			SAT	COMAL
9–07 8–14	DIST		COUNTY	SHEET NO.
7–13 5–21				14 OF 97

98

DISCLAIMER: The use of this standard is governed by the "Texas Engineering Practice Act". No warranty of any kind is made by TxDOT for any purpose whatsoever. TxDOT assumes no responsibility for the conversion of this standard to other formats or for incorrect results or damages resulting from its use.

DATE: 2/8/2024
FILE: W:\00_TGC Project Files\NBR100\CAD\NBR100_GENERAL.dwg

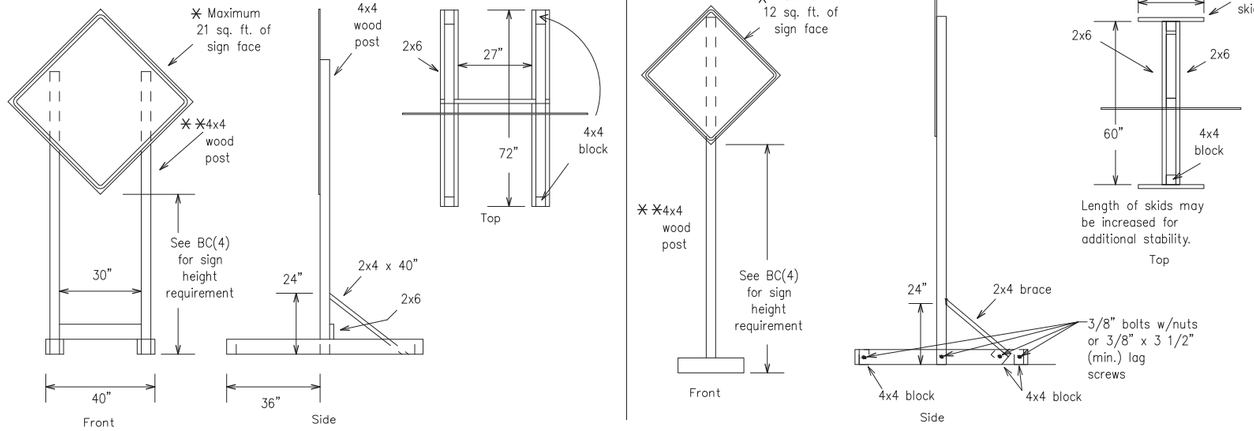

SKID MOUNTED WOOD SIGN SUPPORTS

✱ LONG/INTERMEDIATE TERM STATIONARY – PORTABLE SKID MOUNTED SIGN SUPPORTS

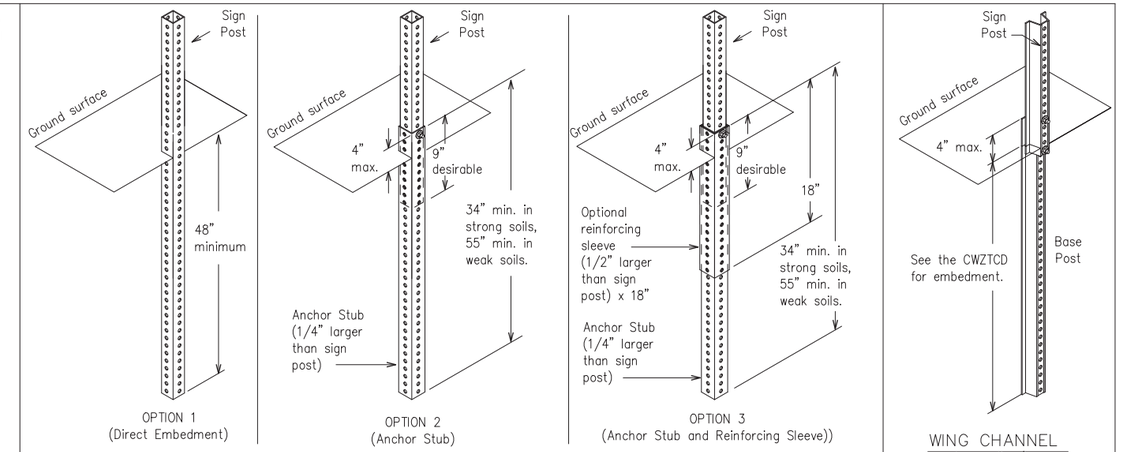

PERFORATED SQUARE METAL TUBING

WING CHANNEL
Lap-splice/base bolted anchor

GROUND MOUNTED SIGN SUPPORTS

Refer to the CWZTCD and the manufacturer's installation procedure for each type sign support.
The maximum sign square footage shall adhere to the manufacturer's recommendation.
Two post installations can be used for larger signs.

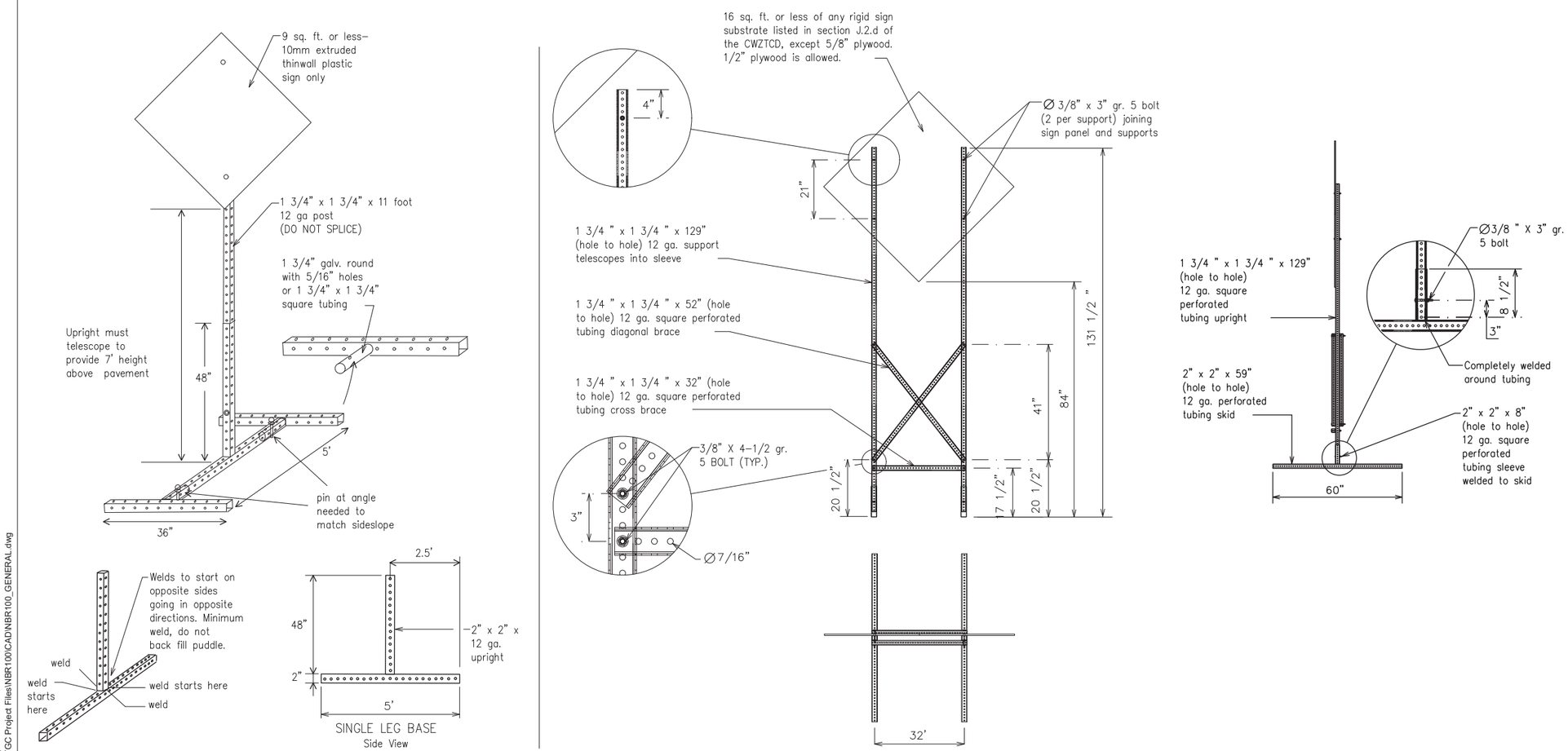

SKID MOUNTED PERFORATED SQUARE STEEL TUBING SIGN SUPPORTS

✱ LONG/INTERMEDIATE TERM STATIONARY – PORTABLE SKID MOUNTED SIGN SUPPORTS

WEDGE ANCHORS

Both steel and plastic Wedge Anchor Systems as shown on the SMD Standard Sheets may be used as temporary sign supports for signs up to 10 square feet of sign face. They may be set in concrete or in sturdy soils if approved by the Engineer. (See web address for "Traffic Engineering Standard Sheets" on BC(1)).

OTHER DESIGNS

MORE DETAILS OF APPROVED LONG/INTERMEDIATE AND SHORT TERM SUPPORTS CAN BE FOUND ON THE CWZTCD LIST. SEE BC(1) FOR WEBSITE LOCATION.

GENERAL NOTES

1. Nails may be used in the assembly of wooden sign supports, but 3/8" bolts with nuts or 3/8" x 3 1/2" lag screws must be used on every joint for final connection.
2. No more than 2 sign posts shall be placed within a 7 ft. circle, except for specific materials noted on the CWZTCD List.
3. When project is completed, all sign supports and foundations shall be removed from the project site. This will be considered subsidiary to Item 502.

✱ See BC(4) for definition of "Work Duration."

✱✱ Wood sign posts MUST be one piece. Splicing will NOT be allowed. Posts shall be painted white.

☐ See the CWZTCD for the type of sign substrate that can be used for each approved sign support.

SHEET 5 OF 12

Texas Department of Transportation — Traffic Safety Division Standard

BARRICADE AND CONSTRUCTION TYPICAL SIGN SUPPORT

BC(5)–21

FILE: bc-21.dgn	DN: TxDOT	CK: TxDOT	DW: TxDOT	CK: TxDOT
©TxDOT November 2002	CONT	SECT	JOB	HIGHWAY
REVISIONS			SAT	COMAL
9-07 8-14	DIST		COUNTY	SHEET NO.
7-13 5-21				15 OF 97

99

DISCLAIMER: The use of this standard is governed by the "Texas Engineering Practice Act". No warranty of any kind is made by TxDOT for any purpose whatsoever. TxDOT assumes no responsibility for the conversion of this standard to other formats or for incorrect results or damages resulting from its use.

DATE: 2/8/2024
FILE: W:\00_TGC Project Files\NBR100\CAD\NBR100_GENERAL.dwg

WHEN NOT IN USE, REMOVE THE PCMS FROM THE RIGHT-OF-WAY OR PLACE THE PCMS BEHIND BARRIER OR GUARDRAIL WITH SIGN PANEL TURNED PARALLEL TO TRAFFIC

PORTABLE CHANGEABLE MESSAGE SIGNS

1. The Engineer/Inspector shall approve all messages used on portable changeable message signs (PCMS).
2. Messages on PCMS should contain no more than 8 words (about four to eight characters per word), not including simple words such as "TO," "FOR," "AT," etc.
3. Messages should consist of a single phase, or two phases that alternate. Three-phase messages are not allowed. Each phase of the message should convey a single thought, and must be understood by itself.
4. Use the word "EXIT" to refer to an exit ramp on a freeway; i.e., "EXIT CLOSED." Do not use the term "RAMP."
5. Always use the route or interstate designation (IH, US, SH, FM) along with the number when referring to a roadway.
6. When in use, the bottom of a stationary PCMS message panel should be a minimum 7 feet above the roadway, where possible.
7. The message term "WEEKEND" should be used only if the work is to start on Saturday morning and end by Sunday evening at midnight. Actual days and hours of work should be displayed on the PCMS if work is to begin on Friday evening and/or continue into Monday morning.
8. The Engineer/Inspector may select one of two options which are available for displaying a two-phase message on a PCMS. Each phase may be displayed for either four seconds each or for three seconds each.
9. Do not "flash" messages or words included in a message. The message should be steady burn or continuous while displayed.
10. Do not present redundant information on a two-phase message; i.e., keeping two lines of the message the same and changing the third line.
11. Do not use the word "Danger" in message.
12. Do not display the message "LANES SHIFT LEFT" or "LANES SHIFT RIGHT" on a PCMS. Drivers do not understand the message.
13. Do not display messages that scroll horizontally or vertically across the face of the sign.
14. The following table lists abbreviated words and two-word phrases that are acceptable for use on a PCMS. Both words in a phrase must be displayed together. Words or phrases not on this list should not be abbreviated, unless shown in the TMUTCD.
15. PCMS character height should be at least 18 inches for trailer mounted units. They should be visible from at least 1/2 (.5) mile and the text should be legible from at least 600 feet at night and 800 feet in daylight. Truck mounted units must have a character height of 10 inches and must be legible from at least 400 feet.
16. Each line of text should be centered on the message board rather than left or right justified.
17. If disabled, the PCMS should default to an illegible display that will not alarm motorists and will only be used to alert workers that the PCMS has malfunctioned. A pattern such as a series of horizontal solid bars is appropriate.

WORD OR PHRASE	ABBREVIATION	WORD OR PHRASE	ABBREVIATION
Access Road	ACCS RD	Major	MAJ
Alternate	ALT	Miles	MI
Avenue	AVE	Miles Per Hour	MPH
Best Route	BEST RTE	Minor	MNR
Boulevard	BLVD	Monday	MON
Bridge	BRDG	Normal	NORM
Cannot	CANT	North	N
Center	CTR	Northbound	(route) N
Construction Ahead	CONST AHD	Parking	PKING
CROSSING	XING	Road	RD
Detour Route	DETOUR RTE	Right Lane	RT LN
Do Not	DONT	Saturday	SAT
East	E	Service Road	SERV RD
Eastbound	(route) E	Shoulder	SHLDR
Emergency	EMER	Slippery	SLIP
Emergency Vehicle	EMER VEH	South	S
Entrance, Enter	ENT	Southbound	(route) S
Express Lane	EXP LN	Speed	SPD
Expressway	EXPWY	Street	ST
XXXX Feet	XXXX FT	Sunday	SUN
Fog Ahead	FOG AHD	Telephone	PHONE
Freeway	FRWY, FWY	Temporary	TEMP
Freeway Blocked	FWY BLKD	Thursday	THURS
Friday	FRI	To Downtown	TO DWNTN
Hazardous Driving	HAZ DRIVING	Traffic	TRAF
Hazardous Material	HAZMAT	Travelers	TRVLRS
High-Occupancy	HOV	Tuesday	TUES
Vehicle Highway	HWY	Time Minutes	TIME MIN
Hour(s)	HR, HRS	Upper Level	UPR LEVEL
Information	INFO	Vehicles (s)	VEH, VEHS
It Is	ITS	Warning	WARN
Junction	JCT	Wednesday	WED
Left	LFT	Weight Limit	WT LIMIT
Left Lane	LFT LN	West	W
Lane Closed	LN CLOSED	Westbound	(route) W
Lower Level	LWR LEVEL	Wet Pavement	WET PVMT
Maintenance	MAINT	Will Not	WONT

Roadway designation # IH-number, US-number, SH-number, FM-number

RECOMMENDED PHASES AND FORMATS FOR PCMS MESSAGES DURING ROADWORK ACTIVITIES

(The Engineer may approve other messages not specifically covered here.)

Phase 1: Condition Lists

Road/Lane/Ramp Closure List

FREEWAY CLOSED X MILE	FRONTAGE ROAD CLOSED
ROAD CLOSED AT SH XXX	SHOULDER CLOSED XXX FT
ROAD CLSD AT FM XXXX	RIGHT LN CLOSED XXX FT
RIGHT X LANES CLOSED	RIGHT X LANES OPEN
CENTER LANE CLOSED	DAYTIME LANE CLOSURES
NIGHT LANE CLOSURES	I-XX SOUTH EXIT CLOSED
VARIOUS LANES CLOSED	EXIT XXX CLOSED X MILE
EXIT CLOSED	RIGHT LN TO BE CLOSED
MALL DRIVEWAY CLOSED	X LANES CLOSED TUE - FRI
XXXXXXXX BLVD CLOSED	

Other Condition List

ROADWORK XXX FT	ROAD REPAIRS XXXX FT
FLAGGER XXXX FT	LANE NARROWS XXXX FT
RIGHT LN NARROWS XXXX FT	TWO-WAY TRAFFIC XX MILE
MERGING TRAFFIC XXXX FT	CONST TRAFFIC XXX FT
LOOSE GRAVEL XXXX FT	UNEVEN LANES XXXX FT
DETOUR X MILE	ROUGH ROAD XXXX FT
ROADWORK PAST SH XXXX	ROADWORK NEXT FRI-SUN
BUMP XXXX FT	US XXX EXIT X MILES
TRAFFIC SIGNAL XXXX FT	LANES SHIFT *

* LANES SHIFT in Phase 1 must be used with STAY IN LANE in Phase 2.

Phase 2: Possible Component Lists

Action to Take/Effect on Travel List

MERGE RIGHT	FORM X LINES RIGHT
DETOUR NEXT X EXITS	USE XXXXX RD EXIT
USE EXIT XXX	USE EXIT I-XX NORTH
STAY ON US XXX SOUTH	USE I-XX E TO I-XX N
TRUCKS USE US XXX N	WATCH FOR TRUCKS
WATCH FOR TRUCKS	EXPECT DELAYS
EXPECT DELAYS	PREPARE TO STOP
REDUCE SPEED XXX FT	END SHOULDER USE
USE OTHER ROUTES	WATCH FOR WORKERS
STAY IN LANE *	

Location List

AT FM XXXX

BEFORE RAILROAD CROSSING

NEXT X MILES

PAST US XXX EXIT

XXXXXXX TO XXXXXXX

US XXX TO FM XXXX

Warning List

SPEED LIMIT XX MPH

MAXIMUM SPEED XX MPH

MINIMUM SPEED XX MPH

ADVISORY SPEED XX MPH

RIGHT LANE EXIT

USE CAUTION

DRIVE SAFELY

DRIVE WITH CARE

** Advance Notice List

TUE-FRI XX AM- X PM

APR XX- XX X PM-X AM

BEGINS MONDAY

BEGINS MAY XX

MAY X-X XX PM - XX AM

NEXT FRI-SUN

XX AM TO XX PM

NEXT TUE AUG XX

TONIGHT XX PM- XX AM

** See Application Guidelines Note 6.

APPLICATION GUIDELINES

1. Only 1 or 2 phases are to be used on a PCMS.
2. The 1st phase (or both) should be selected from the "Road/Lane/Ramp Closure List" and the "Other Condition List".
3. A 2nd phase can be selected from the "Action to Take/Effect on Travel, Location, General Warning, or Advance Notice Phase Lists".
4. A Location Phase is necessary only if a distance or location is not included in the first phase selected.
5. If two PCMS are used in sequence, they must be separated by a minimum of 1000 ft. Each PCMS shall be limited to two phases, and should be understandable by themselves.
6. For advance notice, when the current date is within seven days of the actual work date, calendar days should be replaced with days of the week. Advance notification should typically be for no more than one week prior to the work.

WORDING ALTERNATIVES

1. The words RIGHT, LEFT and ALL can be interchanged as appropriate.
2. Roadway designations IH, US, SH, FM and LP can be interchanged as appropriate.
3. EAST, WEST, NORTH and SOUTH (or abbreviations E, W, N and S) can be interchanged as appropriate.
4. Highway names and numbers replaced as appropriate.
5. ROAD, HIGHWAY and FREEWAY can be interchanged as needed.
6. AHEAD may be used instead of distances if necessary.
7. FT and MI, MILE and MILES interchanged as appropriate.
8. AT, BEFORE and PAST interchanged as needed.
9. Distances or AHEAD can be eliminated from the message if a location phase is used.

PCMS SIGNS WITHIN THE R.O.W. SHALL BE BEHIND GUARDRAIL OR CONCRETE BARRIER OR SHALL HAVE A MINIMUM OF FOUR (4) PLASTIC DRUMS PLACED PERPENDICULAR TO TRAFFIC ON THE UPSTREAM SIDE OF THE PCMS, WHEN EXPOSED TO ONE DIRECTION OF TRAFFIC. WHEN EXPOSED TO TWO WAY TRAFFIC, THE FOUR DRUMS SHOULD BE PLACED WITH ONE DRUM AT EACH OF THE FOUR CORNERS OF THE UNIT.

FULL MATRIX PCMS SIGNS

1. When Full Matrix PCMS signs are used, the character height and legibility/visibility requirements shall be maintained as listed in Note 15 under "PORTABLE CHANGEABLE MESSAGE SIGNS" above.
2. When symbol signs, such as the "Flagger Symbol"(CW20-7) are represented graphically on the Full Matrix PCMS sign and, with the approval of the Engineer, it shall maintain the legibility/visibility requirement listed above.
3. When symbol signs are represented graphically on the Full Matrix PCMS, they shall only supplement the use of the static sign represented, and shall not substitute for, or replace that sign.
4. A full matrix PCMS may be used to simulate a flashing arrow board provided it meets the visibility, flash rate and dimming requirements on BC(7), for the same size arrow.

Texas Department of Transportation — Traffic Safety Division Standard

BARRICADE AND CONSTRUCTION PORTABLE CHANGEABLE MESSAGE SIGN (PCMS)

BC(6)-21

FILE: bc-21.dgn	DN: TxDOT	CK: TxDOT	DW: TxDOT	CK: TxDOT
©TxDOT November 2002	CONT	SECT	JOB	HIGHWAY
REVISIONS			SAT	COMAL
9-07 8-14	DIST		COUNTY	SHEET NO.
7-13 5-21				16 OF 97

100

DISCLAIMER: The use of this standard is governed by the "Texas Engineering Practice Act". No warranty of any kind is made by TxDOT for any purpose whatsoever. TxDOT assumes no responsibility for the conversion of this standard to other formats or for incorrect results or damages resulting from its use.

DATE: 2/8/2024
FILE: W:\00_TGC Project Files\NBR100\CAD\NBR100_GENERAL.dwg

1. Barrier Reflectors shall be pre-qualified, and conform to the color and reflectivity requirements of DMS-8600. A list of prequalified Barrier Reflectors can be found at the Material Producer List web address shown on BC(1).
2. Color of Barrier Reflectors shall be as specified in the TMUTCD. The cost of the reflectors shall be considered subsidiary to Item 512.

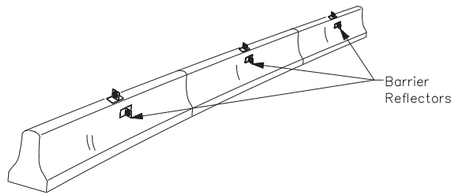

CONCRETE TRAFFIC BARRIER (CTB)

3. Where traffic is on one side of the CTB, two (2) Barrier Reflectors shall be mounted in approximately the midsection of each section of CTB. An alternate mounting location is uniformly spaced at one end of each CTB. This will allow for attachment of a barrier grapple without damaging the reflector. The Barrier Reflector mounted on the side of the CTB shall be located directly below the reflector mounted on top of the barrier, as shown in the detail above.
4. Where CTB separates two-way traffic, three barrier reflectors shall be mounted on each section of CTB. The reflector unit on top shall have two yellow reflective faces (Bi-Directional)while the reflectors on each side of the barrier shall have one yellow reflective face, as shown in the detail above.
5. When CTB separates traffic traveling in the same direction, no barrier reflectors will be required on top of the CTB.
6. Barrier Reflector units shall be yellow or white in color to match the edgeline being supplemented.
7. Maximum spacing of Barrier Reflectors is forty (40) feet.
8. Pavement markers or temporary flexible-reflective roadway marker tabs shall NOT be used as CTB delineation.
9. Attachment of Barrier Reflectors to CTB shall be per manufacturer's recommendations.
10. Missing or damaged Barrier Reflectors shall be replaced as directed by the Engineer.
11. Single slope barriers shall be delineated as shown on the above detail.

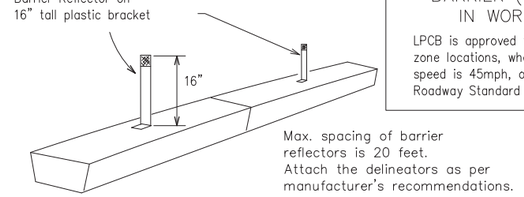

LOW PROFILE CONCRETE BARRIER (LPCB)

LOW PROFILE CONCRETE BARRIER (LPCB) USED IN WORK ZONES

LPCB is approved for use in work zone locations, where the posted speed is 45mph, or less. See Roadway Standard Sheet LPCB.

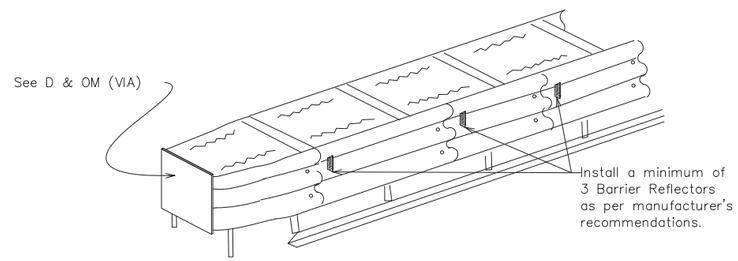

DELINEATION OF END TREATMENTS

END TREATMENTS FOR CTB'S USED IN WORK ZONES

End treatments used on CTB's in work zones shall meet the apppropriate crashworthy standards as defined in the Manual for Assessing Safety Hardware (MASH). Refer to the CWZTCD List for approved end treatments and manufacturers.

BARRIER REFLECTORS FOR CONCRETE TRAFFIC BARRIER AND ATTENUATORS

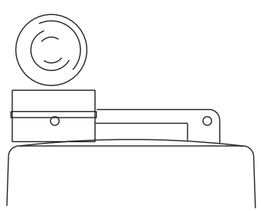

Type C Warning Light or approved substitute mounted on a drum adjacent to the travel way.

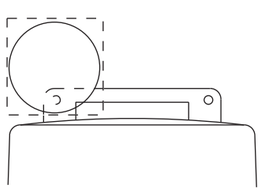

Warning reflector may be round or square.Must have a yellow reflective surface area of at least 30 square inches

WARNING LIGHTS

1. Warning lights shall meet the requirements of the TMUTCD.
2. Warning lights shall NOT be installed on barricades.
3. Type A-Low Intensity Flashing Warning Lights are commonly used with drums. They are intended to warn of or mark a potentially hazardous area. Their use shall be as indicated on this sheet and/or other sheets of the plans by the designation "FL". The Type A Warning Lights shall not be used with signs manufactured with Type B or C Sheeting meeting the requirements of Departmental Material Specification DMS-8300.
4. Type-C and Type D 360 degree Steady Burn Lights are intended to be used in a series for delineation to supplement other traffic control devices. Their use shall be as indicated on this sheet and/or other sheets of the plans by the designation "SB".
5. The Engineer/Inspector or the plans shall specify the location and type of warning lights to be installed on the traffic control devices.
6. When required by the Engineer, the Contractor shall furnish a copy of the warning lights certification. The warning light manufacturer will certify the warning lights meet the requirements of the latest ITE Purchase Specifications for Flashing and Steady-Burn Warning Lights.
7. When used to delineate curves, Type-C and Type D Steady Burn Lights should only be placed on the outside of the curve, not the inside.
8. The location of warning lights and warning reflectors on drums shall be as shown elsewhere in the plans.

WARNING LIGHTS MOUNTED ON PLASTIC DRUMS

1. Type A flashing warning lights are intended to warn drivers that they are approaching or are in a potentially hazardous area.
2. Type A random flashing warning lights are not intended for delineation and shall not be used in a series.
3. A series of sequential flashing warning lights placed on channelizing devices to form a merging taper may be used for delineation. If used, the successive flashing of the sequential warning lights should occur from the beginning of the taper to the end of the merging taper in order to identify the desired vehicle path. The rate of flashing for each light shall be 65 flashes per minute, plus or minus 10 flashes.
4. Type C and D steady-burn warning lights are intended to be used in a series to delineate the edge of the travel lane on detours, on lane changes, on lane closures, and on other similar conditions.
5. Type A, Type C and Type D warning lights shall be installed at locations as detailed on other sheets in the plans.
6. Warning lights shall not be installed on a drum that has a sign, chevron or vertical panel.
7. The maximum spacing for warning lights on drums should be identical to the channelizing device spacing.

WARNING REFLECTORS MOUNTED ON PLASTIC DRUMS AS A SUBSTITUTE FOR TYPE C (STEADY BURN) WARNING LIGHTS

1. A warning reflector or approved substitute may be mounted on a plastic drum as a substitute for a Type C, steady burn warning light at the discretion of the Contractor unless otherwise noted in the plans.
2. The warning reflector shall be yellow in color and shall be manufactured using a sign substrate approved for use with plastic drums listed on the CWZTCD.
3. The warning reflector shall have a minimum retroreflective surface area (one-side) of 30 square inches.
4. Round reflectors shall be fully reflectorized, including the area where attached to the drum.
5. Square substrates must have a minimum of 30 square inches of reflectorized sheeting. They do not have to be reflectorized where it attaches to the drum.
6. The side of the warning reflector facing approaching traffic shall have sheeting meeting the color and retroreflectivity requirements for DMS 8300-Type B or Type C.
7. When used near two-way traffic, both sides of the warning reflector shall be reflectorized.
8. The warning reflector should be mounted on the side of the handle nearest approaching traffic.
9. The maximum spacing for warning reflectors should be identical to the channelizing device spacing requirements.

Arrow Boards may be located behind channelizing devices in place for a shoulder taper or merging taper, otherwise they shall be delineated with four (4) channelizing devices placed perpendicular to traffic on the upstream side of traffic.

1. The Flashing Arrow Board should be used for all lane closures on multi-lane roadways, or slow moving maintenance or construction activities on the travel lanes.
2. Flashing Arrow Boards should not be used on two-lane, two-way roadways, detours, diversions or work on shoulders unless the "CAUTION" display (see detail below) is used.
3. The Engineer/Inspector shall choose all appropriate signs, barricades and/or other traffic control devices that should be used in conjunction with the Flashing Arrow Board.
4. The Flashing Arrow Board should be able to display the following symbols:

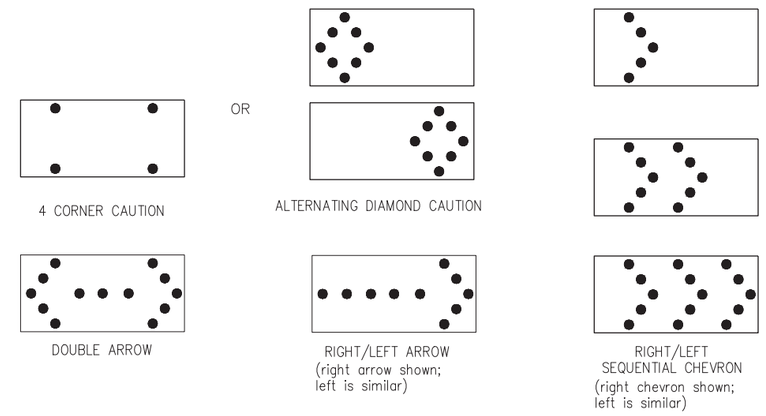

5. The "CAUTION" display consists of four corner lamps flashing simultaneously, or the Alternating Diamond Caution mode as shown.
6. The straight line caution display is NOT ALLOWED.
7. The Flashing Arrow Board shall be capable of minimum 50 percent dimming from rated lamp voltage. The flashing rate of the lamps shall not be less than 25 nor more than 40 flashes per minute.
8. Minimum lamp "on time" shall be approximately 50 percent for the flashing arrow and equal intervals of 25 percent for each sequential phase of the flashing chevron.
9. The sequential arrow display is NOT ALLOWED.
10. The flashing arrow display is the TxDOT standard; however, the sequential chevron display may be used during daylight operations.
11. The Flashing Arrow Board shall be mounted on a vehicle, trailer or other suitable support.
12. A Flashing Arrow Board SHALL NOT BE USED to laterally shift traffic.
13. A full matrix PCMS may be used to simulate a Flashing Arrow Board provided it meets visibility, flash rate and dimming requirements on this sheet for the same size arrow.
14. Minimum mounting height of trailer mounted Arrow Boards should be 7 feet from roadway to bottom of panel.

REQUIREMENTS			
TYPE	MINIMUM SIZE	MINIMUM NUMBER OF PANEL LAMPS	MINIMUM VISIBILITY DISTANCE
B	30 x 60	13	3/4 mile
C	48 x 96	15	1 mile

ATTENTION
Flashing Arrow Boards shall be equipped with automatic dimming devices.

WHEN NOT IN USE, REMOVE THE ARROW BOARD FROM THE RIGHT-OF-WAY OR PLACE THE ARROW BOARD BEHIND CONCRETE TRAFFIC BARRIER OR GUARDRAIL.

FLASHING ARROW BOARDS

TRUCK-MOUNTED ATTENUATORS

1. Truck-mounted attenuators (TMA) used on TxDOT facilities must meet the requirements outlined in the Manual for Assessing Safety Hardware (MASH).
2. Refer to the CWZTCD for the requirements of Level 2 or Level 3 TMAs.
3. Refer to the CWZTCD for a list of approved TMAs.
4. TMAs are required on freeways unless otherwise noted in the plans.
5. A TMA should be used anytime that it can be positioned 30 to 100 feet in advance of the area of crew exposure without adversely affecting the work performance.
6. The only reason a TMA should not be required is when a work area is spread down the roadway and the work crew is an extended distance from the TMA.

Texas Department of Transportation — Traffic Safety Division Standard

BARRICADE AND CONSTRUCTION ARROW PANEL, REFLECTORS, WARNING LIGHTS & ATTENUATOR

BC(7)-21

FILE: bc-21.dgn	DN: TxDOT	CK: TxDOT	DW: TxDOT	CK: TxDOT
©TxDOT November 2002	CONT	SECT	JOB	HIGHWAY
REVISIONS			SAT	COMAL
9-07 8-14	DIST		COUNTY	SHEET NO.
7-13 5-21				17 OF 97

101

DISCLAIMER: The use of this standard is governed by the "Texas Engineering Practice Act". No warranty of any kind is made by TxDOT for any purpose whatsoever. TxDOT assumes no responsibility for the conversion of this standard to other formats or for incorrect results or damages resulting from its use.

DATE: 2/8/2024
FILE: W:\00_TGC Project Files\NBR100\CAD\NBR100_GENERAL.dwg

GENERAL NOTES

1. For long term stationary work zones on freeways, drums shall be used as the primary channelizing device.
2. For intermediate term stationary work zones on freeways, drums should be used as the primary channelizing device but may be replaced in tangent sections by vertical panels, or 42" two-piece cones. In tangent sections, one-piece cones may be used with the approval of the Engineer but only if personnel are present on the project at all times to maintain the cones in proper position and location.
3. For short term stationary work zones on freeways, drums are the preferred channelizing device but may be replaced in tapers, transitions and tangent sections by vertical panels, two-piece cones or one-piece cones as approved by the Engineer.
4. Drums and all related items shall comply with the requirements of the current version of the "Texas Manual on Uniform Traffic Control Devices" (TMUTCD) and the "Compliant Work Zone Traffic Control Devices List" (CWZTCD).
5. Drums, bases, and related materials shall exhibit good workmanship and shall be free from objectionable marks or defects that would adversely affect their appearance or serviceability.
6. The Contractor shall have a maximum of 24 hours to replace any plastic drums identified for replacement by the Engineer/Inspector. The replacement device must be an approved device.

GENERAL DESIGN REQUIREMENTS

Pre-qualified plastic drums shall meet the following requirements:

1. Plastic drums shall be a two-piece design; the "body" of the drum shall be the top portion and the "base" shall be the bottom.
2. The body and base shall lock together in such a manner that the body separates from the base when impacted by a vehicle traveling at a speed of 20 MPH or greater but prevents accidental separation due to normal handling and/or air turbulence created by passing vehicles.
3. Plastic drums shall be constructed of lightweight flexible, and deformable materials. The Contractor shall NOT use metal drums or single piece plastic drums as channelization devices or sign supports.
4. Drums shall present a profile that is a minimum of 18 inches in width at the 36 inch height when viewed from any direction. The height of drum unit (body installed on base) shall be a minimum of 36 inches and a maximum of 42 inches.
5. The top of the drum shall have a built-in handle for easy pickup and shall be designed to drain water and not collect debris. The handle shall have a minimum of two widely spaced 9/16 inch diameter holes to allow attachment of a warning light, warning reflector unit or approved compliant sign.
6. The exterior of the drum body shall have a minimum of four alternating orange and white retroreflective circumferential stripes not less than 4 inches nor greater than 8 inches in width. Any non-reflectorized space between any two adjacent stripes shall not exceed 2 inches in width.
7. Bases shall have a maximum width of 36 inches, a maximum height of 4 inches, and a minimum of two footholds of sufficient size to allow base to be held down while separating the drum body from the base.
8. Plastic drums shall be constructed of ultra-violet stabilized, orange, high-density polyethylene (HDPE) or other approved material.
9. Drum body shall have a maximum unballasted weight of 11 lbs.
10. Drum and base shall be marked with manufacturer's name and model number.

RETROREFLECTIVE SHEETING

1. The stripes used on drums shall be constructed of sheeting meeting the color and retroreflectivity requirements of Departmental Materials Specification DMS-8300, "Sign Face Materials." Type A or Type B reflective sheeting shall be supplied unless otherwise specified in the plans.
2. The sheeting shall be suitable for use on and shall adhere to the drum surface such that, upon vehicular impact, the sheeting shall remain adhered in-place and exhibit no delaminating, cracking, or loss of retroreflectivity other than that loss due to abrasion of the sheeting surface.

BALLAST

1. Unballasted bases shall be large enough to hold up to 50 lbs. of sand. This base, when filled with the ballast material, should weigh between 35 lbs (minimum) and 50 lbs (maximum). The ballast may be sand in one to three sandbags separate from the base, sand in a sand-filled plastic base, or other ballasting devices as approved by the Engineer. Stacking of sandbags will be allowed, however height of sandbags above pavement surface may not exceed 12 inches.
2. Bases with built-in ballast shall weigh between 40 lbs. and 50 lbs. Built-in ballast can be constructed of an integral crumb rubber base or a solid rubber base.
3. Recycled truck tire sidewalls may be used for ballast on drums approved for this type of ballast on the CWZTCD list.
4. The ballast shall not be heavy objects, water, or any material that would become hazardous to motorists, pedestrians, or workers when the drum is struck by a vehicle.
5. When used in regions susceptible to freezing, drums shall have drainage holes in the bottoms so that water will not collect and freeze becoming a hazard when struck by a vehicle.
6. Ballast shall not be placed on top of drums.
7. Adhesives may be used to secure base of drums to pavement.

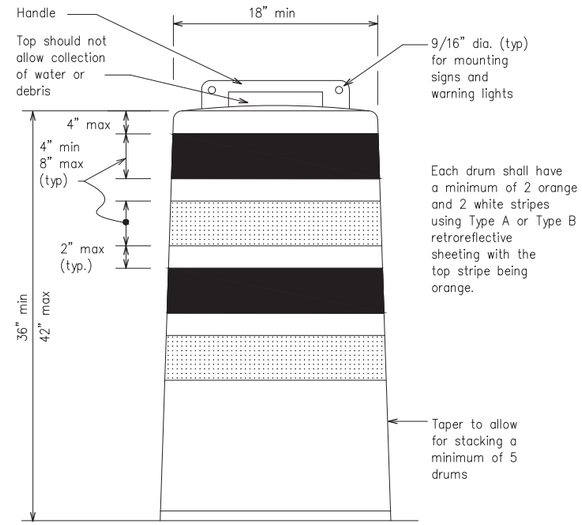

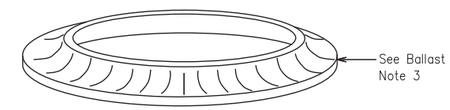

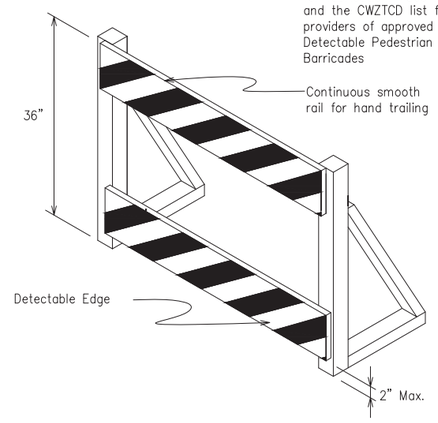

DETECTABLE PEDESTRIAN BARRICADES

1. When existing pedestrian facilities are disrupted, closed, or relocated in a TTC zone, the temporary facilities shall be detectable and include accessibility features consistent with the features present in the existing pedestrian facility. Refer to WZ(BTS-2) for Pedestrian Control requirements for Sidewalk Diversions, Sidewalk Detours and Crosswalk Closures.
2. Where pedestrians with visual disabilities normally use the closed sidewalk, a Detectable Pedestrian Barricade shall be placed across the full width of the closed sidewalk instead of a Type 3 Barricade.3. Detectable pedestrian barricades similar to the one pictured above, longitudinal channelizing devices, some concrete barriers, and wood or chain link fencing with a continuous detectable edging can satisfactorily delineate a pedestrian path.4. Tape, rope, or plastic chain strung between devices are not detectable, do not comply with the design standards in the "Americans with Disabilities Act Accessibility Guidelines (ADAAG)" and should not be used as a control for pedestrian movements.5. Warning lights shall not be attached to detectable pedestrian barricades.
6. Detectable pedestrian barricades should use 8" nominal barricade rails as shown on BC(10) provided that the top rail provides a smooth continuous rail suitable for hand trailing with no splinters, burrs, or sharp edges.

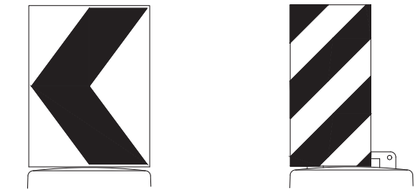

18" x 24" Sign (Maximum Sign Dimension) Chevron CW1-8, Opposing Traffic Lane Divider, Driveway sign D70a, Keep Right R4 series or other signs as approved by Engineer

12" x 24" Vertical Panel mount with diagonals sloping down towards travel way

Plywood, Aluminum or Metal sign substrates shall NOT be used on plastic drums

SIGNS, CHEVRONS, AND VERTICAL PANELS MOUNTED ON PLASTIC DRUMS

1. Signs used on plastic drums shall be manufactured using substrates listed on the CWZTCD.
2. Chevrons and other work zone signs with an orange background shall be manufactured with Type B or Type C $Orange_{FL}$ sheeting meeting the color and retroreflectivity requirements of DMS-8300, "Sign Face Material," unless otherwise specified in the plans.
3. Vertical Panels shall be manufactured with orange and white sheeting meeting the requirements of DMS-8300 Type A or Type B. Diagonal stripes on Vertical Panels shall slope down toward the intended traveled lane.
4. Other sign messages (text or symbolic) may be used as approved by the Engineer. Sign dimensions shall not exceed 18 inches in width or 24 inches in height, except for the R9 series signs discussed in note 8 below.
5. Signs shall be installed using a 1/2 inch bolt (nominal) and nut, two washers, and one locking washer for each connection.
6. Mounting bolts and nuts shall be fully engaged and adequately torqued. Bolts should not extend more than 1/2 inch beyond nuts.
7. Chevrons may be placed on drums on the outside of curves, on merging tapers or on shifting tapers. When used in these locations, they may be placed on every drum or spaced not more than on every third drum. A minimum of three (3) should be used at each location called for in the plans.
8. R9-9, R9-10, R9-11 and R9-11a Sidewalk Closed signs which are 24 inches wide may be mounted on plastic drums, with approval of the Engineer.

Texas Department of Transportation — Traffic Safety Division Standard

BARRICADE AND CONSTRUCTION CHANNELIZING DEVICES

BC(8)-21

FILE: bc-21.dgn	DN: TxDOT	CK: TxDOT	DW: TxDOT	CK: TxDOT
©TxDOT November 2002	CONT	SECT	JOB	HIGHWAY
REVISIONS			SAT	COMAL
4-03 8-14	DIST		COUNTY	SHEET NO.
9-07 5-21				18 OF 97
7-13				
102				

DISCLAIMER: The use of this standard is governed by the "Texas Engineering Practice Act". No warranty of any kind is made by TxDOT for any purpose whatsoever. TxDOT assumes no responsibility for the conversion of this standard to other formats or for incorrect results or damages resulting from its use.

DATE: 2/8/2024
FILE: W:\00_TGC Project Files\NBR100\CAD\NBR100_GENERAL.dwg

DISCLAIMER: The use of this standard is governed by the "Texas Engineering Practice Act". No warranty of any kind is made by TxDOT for any purpose whatsoever. TxDOT assumes no responsibility for the conversion of this standard to other formats or for incorrect results or damages resulting from its use.

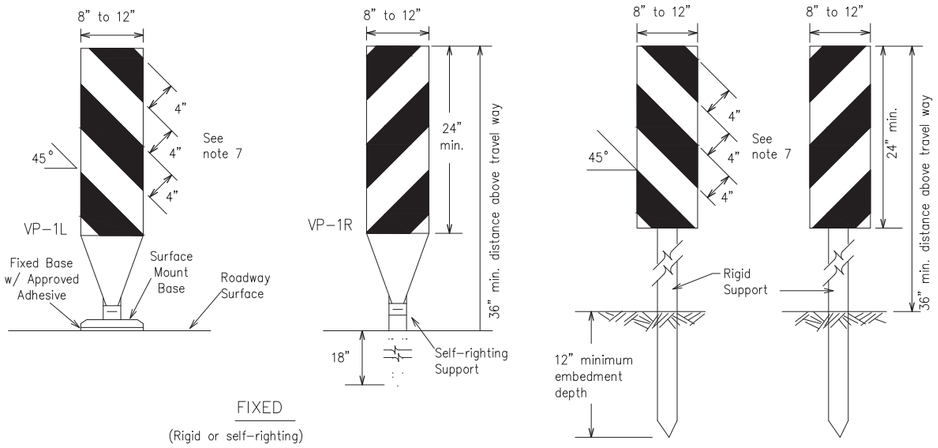

FIXED

(Rigid or self-righting)

DRIVEABLE

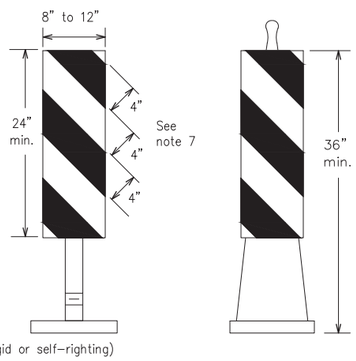

(Rigid or self-righting)

PORTABLE

1. Vertical Panels (VP's) are normally used to channelize traffic or divide opposing lanes of traffic.
2. VP's may be used in daytime or nighttime situations. They may be used at the edge of shoulder drop-offs and other areas such as lane transitions where positive daytime and nighttime delineation is required. The Engineer/Inspector shall refer to the Roadway Design Manual for additional requirements on the use VP's for drop-offs.
3. VP's should be mounted back to back if used at the edge of cuts adjacent to two-way two lane roadways. Stripes are to be reflective orange and reflective white and should always slope downward toward the travel lane.
4. VP's used on expressways and freeways or other high speed roadways, may have more than 270 square inches of retroreflective area facing traffic.
5. Self-righting supports are available with portable base. See "Compliant Work Zone Traffic Control Devices List" (CWZTCD).
6. Sheeting for the VP's shall be retroreflective Type A or Type B conforming to Departmental Material Specification DMS-8300, unless noted otherwise.
7. Where the height of reflective material on the vertical panel is 36 inches or greater, a panel stripe of 6 inches shall be used.

VERTICAL PANELS (VPs)

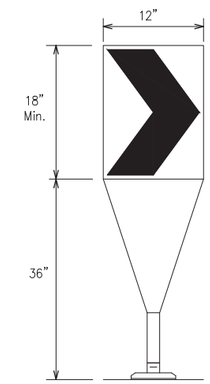

Fixed Base w/ Approved Adhesive (Driveable Base, or Flexible Support can be used)

1. The chevron shall be a vertical rectangle with a minimum size of 12 by 18 inches.
2. Chevrons are intended to give notice of a sharp change of alignment with the direction of travel and provide additional emphasis and guidance for vehicle operators with regard to changes in horizontal alignment of the roadway.
3. Chevrons, when used, shall be erected on the outside of a sharp curve or turn, or on the far side of an intersection. They shall be in line with and at right angles to approaching traffic. Spacing should be such that the motorist always has three in view, until the change in alignment eliminates its need.
4. To be effective, the chevron should be visible for at least 500 feet.
5. Chevrons shall be orange with a black nonreflective legend. Sheeting for the chevron shall be retroreflective Type B or Type C conforming to Departmental Material Specification DMS-8300, unless noted otherwise. The legend shall meet the requirements of DMS-8300.
6. For Long Term Stationary use on tapers or transitions on freeways and divided highways, self-righting chevrons may be used to supplement plastic drums but not to replace plastic drums.

CHEVRONS

GENERAL NOTES

1. Work Zone channelizing devices illustrated on this sheet may be installed in close proximity to traffic and are suitable for use on high or low speed roadways. The Engineer/Inspector shall ensure that spacing and placement is uniform and in accordance with the "Texas Manual on Uniform Traffic Control Devices" (TMUTCD).
2. Channelizing devices shown on this sheet may have a driveable, fixed or portable base. The requirement for self-righting channelizing devices must be specified in the General Notes or other plan sheets.
3. Channelizing devices on self-righting supports should be used in work zone areas where channelizing devices are frequently impacted by errant vehicles or vehicle related wind gusts making alignment of the channelizing devices difficult to maintain. Locations of these devices shall be detailed elsewhere in the plans. These devices shall conform to the TMUTCD and the "Compliant Work Zone Traffic Control Devices List" (CWZTCD).
4. The Contractor shall maintain devices in a clean condition and replace damaged, nonreflective, faded, or broken devices and bases as required by the Engineer/Inspector. The Contractor shall be required to maintain proper device spacing and alignment.
5. Portable bases shall be fabricated from virgin and/or recycled rubber. The portable bases shall weigh a minimum of 30 lbs.
6. Pavement surfaces shall be prepared in a manner that ensures proper bonding between the adhesives, the fixed mount bases and the pavement surface. Adhesives shall be prepared and applied according to the manufacturer's recommendations.
7. The installation and removal of channelizing devices shall not cause detrimental effects to the final pavement surfaces, including pavement surface discoloration or surface integrity. Driveable bases shall not be permitted on final pavement surfaces. The Engineer/Inspector shall approve all application and removal procedures of fixed bases.

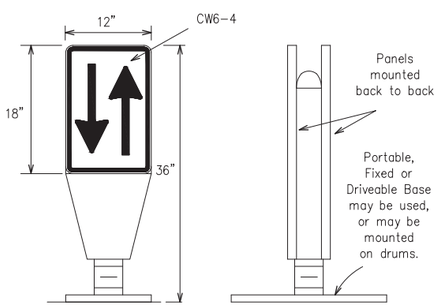

1. Opposing Traffic Lane Dividers (OTLD) are delineation devices designed to convert a normal one-way roadway section to two-way operation. OTLD's are used on temporary centerlines. The upward and downward arrows on the sign's face indicate the direction of traffic on either side of the divider. The base is secured to the pavement with an adhesive or rubber weight to minimize movement caused by a vehicle impact or wind gust.
2. The OTLD may be used in combination with 42" cones or VPs.
3. Spacing between the OTLD shall not exceed 500 feet. 42" cones or VPs placed between the OTLD's should not exceed 100 foot spacing.
4. The OTLD shall be orange with a black nonreflective legend. Sheeting for the OTLD shall be retroreflective Type B or Type C conforming to Departmental Material Specification DMS-8300, unless noted otherwise. The legend shall meet the requirements of DMS-8300.

OPPOSING TRAFFIC LANE DIVIDERS (OTLD)

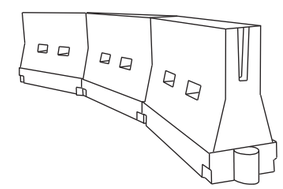

LONGITUDINAL CHANNELIZING DEVICES (LCD)

1. LCDs are crashworthy, lightweight, deformable devices that are highly visible, have good target value and can be connected together. They are not designed to contain or redirect a vehicle on impact.
2. LCDs may be used instead of a line of cones or drums.
3. LCDs shall be placed in accordance to application and installation requirements specific to the device, and used only when shown on the CWZTCD list.
4. LCDs should not be used to provide positive protection for obstacles, pedestrians or workers.
5. LCDs shall be supplemented with retroreflective delineation as required for temporary barriers on BC(7) when placed roughly parallel to the travel lanes.
6. LCDs used as barricades placed perpendicular to traffic should have at least one row of reflective sheeting meeting the requirements for barricade rails as shown on BC(10). Place reflective sheeting near the top of the LCD along the full length of the device.

WATER BALLASTED SYSTEMS USED AS BARRIERS

1. Water ballasted systems used as barriers shall not be used solely to channelize road users, but also to protect the work space per the appropriate Manual for Assessing Safety Hardware (MASH) crashworthiness requirements based on roadway speed and barrier application.
2. Water ballasted systems used to channelize vehicular traffic shall be supplemented with retroreflective delineation or channelizing devices to improve daytime/nighttime visibility. They may also be supplemented with pavement markings.
3. Water ballasted systems used as barriers shall be placed in accordance to application and installation requirements specific to the device, and used only when shown on the CWZTCD list.
4. Water ballasted systems used as barriers should not be used for a merging taper except in low speed (less than 45 MPH) urban areas. When used on a taper in a low speed urban area, the taper shall be delineated and the taper length should be designed to optimize road user operations considering the available geometric conditions.
5. When water ballasted systems used as barriers have blunt ends exposed to traffic, they should be attenuated as per manufacturer recommendations or flared to a point outside the clear zone.

If used to channelize pedestrians, longitudinal channelizing devices or water ballasted systems must have a continuous detectable bottom for users of long canes and the top of the unit shall not be less than 32 inches in height.

HOLLOW OR WATER BALLASTED SYSTEMS USED AS LONGITUDINAL CHANNELIZING DEVICES OR BARRIERS

Posted Speed	Formula	Minimum Desirable Taper Lengths **			Suggested Maximum Spacing of Channelizing Devices	
		10' Offset	11' Offset	12' Offset	On a Taper	On a Tangent
30	$L=\frac{WS^2}{60}$	150'	165'	180'	30'	60'
35		205'	225'	245'	35'	70'
40		265'	295'	320'	40'	80'
45	L=WS	450'	495'	540'	45'	90'
50		500'	550'	600'	50'	100'
55		550'	605'	660'	55'	110'
60		600'	660'	720'	60'	120'
65		650'	715'	780'	65'	130'
70		700'	770'	840'	70'	140'
75		750'	825'	900'	75'	150'
80		800'	880'	960'	80'	160'

** Taper lengths have been rounded off.
L=Length of Taper (FT.) W=Width of Offset (FT.)
S=Posted Speed (MPH)

SUGGESTED MAXIMUM SPACING OF CHANNELIZING DEVICES AND MINIMUM DESIRABLE TAPER LENGTHS

Texas Department of Transportation — Traffic Safety Division Standard

BARRICADE AND CONSTRUCTION CHANNELIZING DEVICES

BC(9)-21

FILE: bc-21.dgn	DN: TxDOT	CK: TxDOT	DW: TxDOT	CK: TxDOT
©TxDOT November 2002	CONT	SECT	JOB	HIGHWAY
REVISIONS			SAT	COMAL
9-07 8-14	DIST		COUNTY	SHEET NO.
7-13 5-21				19 OF 97

DATE: 2/8/2024
FILE: W:\00_TGC Project Files\NBR100\CAD\NBR100_GENERAL.dwg

TYPE 3 BARRICADES

1. Refer to the Compliant Work Zone Traffic Control Devices List (CWZTCD) for details of the Type 3 Barricades and a list of all materials used in the construction of Type 3 Barricades.
2. Type 3 Barricades shall be used at each end of construction projects closed to all traffic.
3. Barricades extending across a roadway should have stripes that slope downward in the direction toward which traffic must turn in detouring. When both right and left turns are provided, the chevron striping may slope downward in both directions from the center of the barricade. Where no turns are provided at a closed road, striping should slope downward in both directions toward the center of roadway.
4. Striping of rails, for the right side of the roadway, should slope downward to the left. For the left side of the roadway, striping should slope downward to the right.
5. Identification markings may be shown only on the back of the barricade rails. The maximum height of letters and/or company logos used for identification shall be 1".
6. Barricades shall not be placed parallel to traffic unless an adequate clear zone is provided.
7. Warning lights shall NOT be installed on barricades.
8. Where barricades require the use of weights to keep from turning over, the use of sandbags with dry, cohesionless sand is recommended. The sandbags will be tied shut to keep the sand from spilling and to maintain a constant weight. Sand bags shall not be stacked in a manner that covers any portion of a barricade rails reflective sheeting. Rock, concrete, iron, steel or other solid objects will NOT be permitted. Sandbags should weigh a minimum of 35 lbs and a maximum of 50 lbs. Sandbags shall be made of a durable material that tears upon vehicular impact. Rubber (such as tire inner tubes) shall not be used for sandbags. Sandbags shall only be placed along or upon the base supports of the device and shall not be suspended above ground level or hung with rope, wire, chains or other fasteners.
9. Sheeting for barricades shall be retroreflective Type A or Type B conforming to Departmental Material Specification DMS-8300 unless otherwise noted.

Barricades shall NOT be used as a sign support.

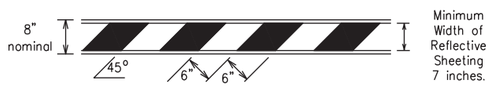

TYPICAL STRIPING DETAIL FOR BARRICADE RAIL

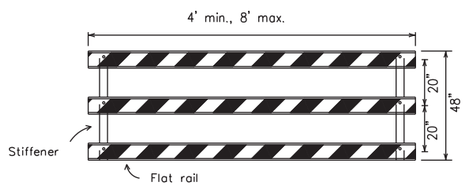

Stiffener may be inside or outside of support, but no more than 2 stiffeners shall be allowed on one barricade.

TYPICAL PANEL DETAIL FOR SKID OR POST TYPE BARRICADES

Each roadway of a divided highway shall be barricaded in the same manner.

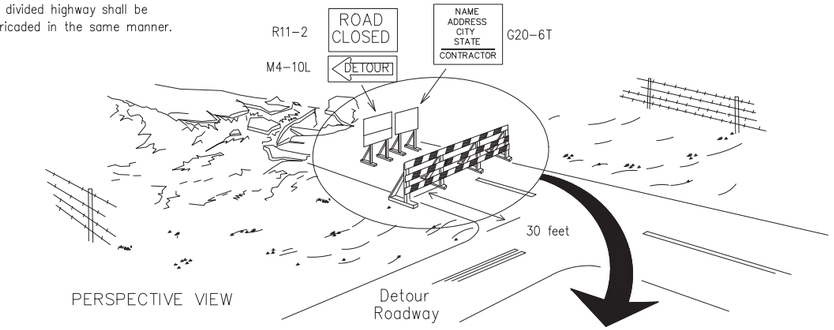

PERSPECTIVE VIEW

The three rails on Type 3 barricades shall be reflectorized orange and reflective white stripes on one side facing one-way traffic and both sides for two-way traffic.

Barricade striping should slant downward in the direction of detour.

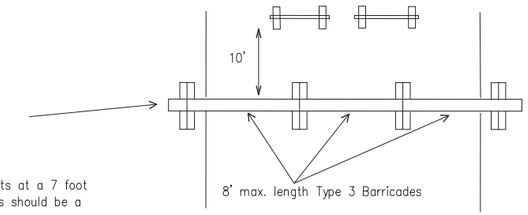

PLAN VIEW

1. Signs should be mounted on independent supports at a 7 foot mounting height in center of roadway. The signs should be a minimum of 10 feet behind Type 3 Barricades.
2. Advance signing shall be as specified elsewhere in the plans.

TYPE 3 BARRICADE (POST AND SKID) TYPICAL APPLICATION

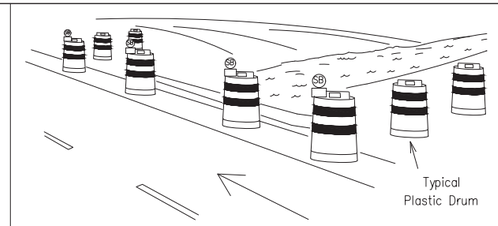

PERSPECTIVE VIEW

1. Where positive redirectional capability is provided, drums may be omitted.
2. Plastic construction fencing may be used with drums for safety as required in the plans.
3. Vertical Panels on flexible support may be substituted for drums when the shoulder width is less than 4 feet.
4. When the shoulder width is greater than 12 feet, steady-burn lights may be omitted if drums are used.
5. Drums must extend the length of the culvert widening.

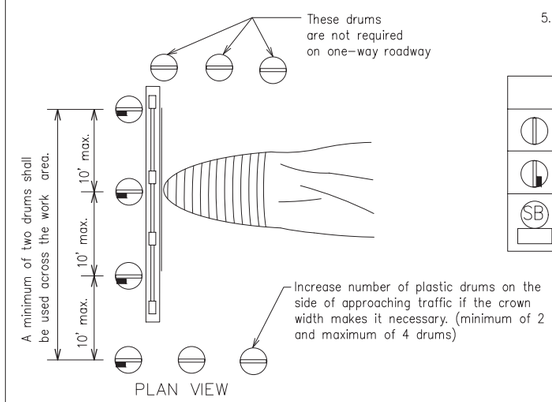

PLAN VIEW

LEGEND	
	Plastic drum
	Plastic drum with steady burn light or yellow warning reflector
SB	Steady burn warning light or yellow warning reflector

CULVERT WIDENING OR OTHER ISOLATED WORK WITHIN THE PROJECT LIMITS

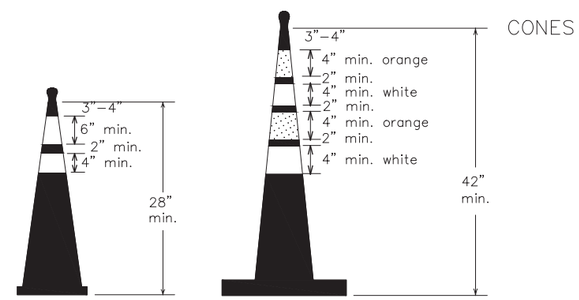

Two-Piece cones

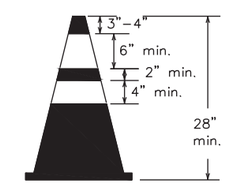

One-Piece cones

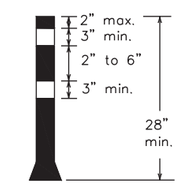

Tubular Marker

28" Cones shall have a minimum weight of 9 1/2 lbs.

42" 2-piece cones shall have a minimum weight of 30 lbs. including base.

1. Traffic cones and tubular markers shall be predominantly orange, and meet the height and weight requirements shown above.
2. One-piece cones have the body and base of the cone molded in one consolidated unit. Two-piece cones have a cone shaped body and a separate rubber base, or ballast, that is added to keep the device upright and in place.
3. Two-piece cones may have a handle or loop extending up to 8" above the minimum height shown, in order to aid in retrieving the device.
4. Cones or tubular markers shall have white or white and orange reflective bands as shown above. The reflective bands shall have a smooth, sealed outer surface and meet the requirements of Departmental Material Specification DMS-8300 Type A or Type B.
5. 28" cones and tubular markers are generally suitable for short duration and short-term stationary work as defined on BC(4). These should not be used for intermediate-term or long-term stationary work unless personnel is on-site to maintain them in their proper upright position.
6. 42" two-piece cones, vertical panels or drums are suitable for all work zone durations.
7. Cones or tubular markers used on each project should be of the same size and shape.

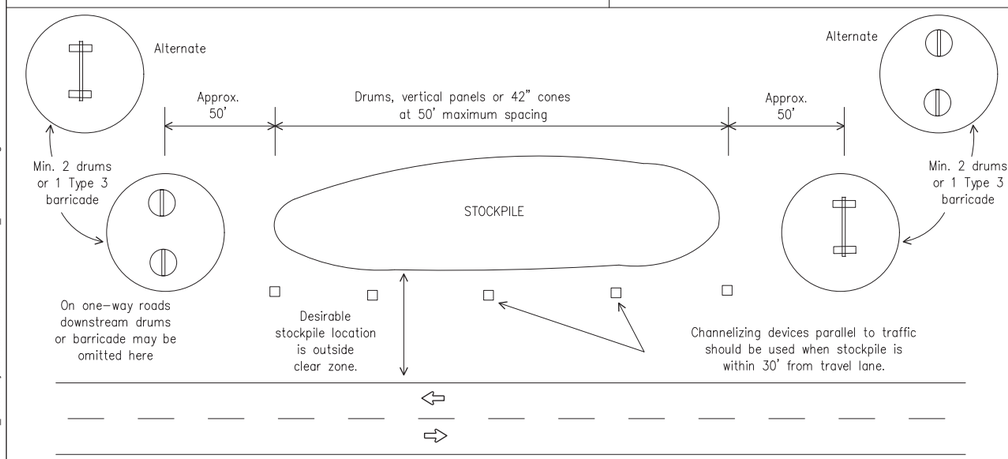

TRAFFIC CONTROL FOR MATERIAL STOCKPILES

DISCLAIMER: The use of this standard is governed by the "Texas Engineering Practice Act". No warranty of any kind is made by TxDOT for any purpose whatsoever. TxDOT assumes no responsibility for the conversion of this standard to other formats or for incorrect results or damages resulting from its use.

DATE: 2/8/2024
FILE: W:\00_TGC Project Files\NBR100\CAD\NBR100_GENERAL.dwg

Texas Department of Transportation — Traffic Safety Division Standard

BARRICADE AND CONSTRUCTION CHANNELIZING DEVICES

BC(10)-21

FILE: bc-21.dgn	DN: TxDOT	CK: TxDOT	DW: TxDOT	CK: TxDOT
© TxDOT November 2002	CONT	SECT	JOB	HIGHWAY
REVISIONS			SAT	COMAL
9-07 8-14	DIST		COUNTY	SHEET NO.
7-13 5-21				20 OF 97

104

WORK ZONE PAVEMENT MARKINGS

GENERAL

1. The Contractor shall be responsible for maintaining work zone and existing pavement markings, in accordance with the standard specifications and special provisions, on all roadways open to traffic within the CSJ limits unless otherwise stated in the plans.
2. Color, patterns and dimensions shall be in conformance with the "Texas Manual on Uniform Traffic Control Devices" (TMUTCD).
3. Additional supplemental pavement marking details may be found in the plans or specifications.
4. Pavement markings shall be installed in accordance with the TMUTCD and as shown on the plans.
5. When short term markings are required on the plans, short term markings shall conform with the TMUTCD, the plans and details as shown on the Standard Plan Sheet WZ(STPM).
6. When standard pavement markings are not in place and the roadway is opened to traffic, DO NOT PASS signs shall be erected to mark the beginning of the sections where passing is prohibited and PASS WITH CARE signs at the beginning of sections where passing is permitted.
7. All work zone pavement markings shall be installed in accordance with Item 662, "Work Zone Pavement Markings."

RAISED PAVEMENT MARKERS

1. Raised pavement markers are to be placed according to the patterns on BC(12).
2. All raised pavement markers used for work zone markings shall meet the requirements of Item 672, "RAISED PAVEMENT MARKERS" and Departmental Material Specification DMS-4200 or DMS-4300.

PREFABRICATED PAVEMENT MARKINGS

1. Removable prefabricated pavement markings shall meet the requirements of DMS-8241.
2. Non-removable prefabricated pavement markings (foil back) shall meet the requirements of DMS-8240.

MAINTAINING WORK ZONE PAVEMENT MARKINGS

1. The Contractor will be responsible for maintaining work zone pavement markings within the work limits.
2. Work zone pavement markings shall be inspected in accordance with the frequency and reporting requirements of work zone traffic control device inspections as required by Form 599.
3. The markings should provide a visible reference for a minimum distance of 300 feet during normal daylight hours and 160 feet when illuminated by automobile low-beam headlights at night, unless sight distance is restricted by roadway geometrics.
4. Markings failing to meet this criteria within the first 30 days after placement shall be replaced at the expense of the Contractor as per Specification Item 662.

REMOVAL OF PAVEMENT MARKINGS

1. Pavement markings that are no longer applicable, could create confusion or direct a motorist toward or into the closed portion of the roadway shall be removed or obliterated before the roadway is opened to traffic.
2. The above shall not apply to detours in place for less than three days, where flaggers and/or sufficient channelizing devices are used in lieu of markings to outline the detour route.
3. Pavement markings shall be removed to the fullest extent possible, so as not to leave a discernable marking. This shall be by any method approved by TxDOT Specification Item 677 for "Eliminating Existing Pavement Markings and Markers".
4. The removal of pavement markings may require resurfacing or seal coating portions of the roadway as described in Item 677.
5. Subject to the approval of the Engineer, any method that proves to be successful on a particular type pavement may be used.
6. Blast cleaning may be used but will not be required unless specifically shown in the plans.
7. Over-painting of the markings SHALL NOT BE permitted.
8. Removal of raised pavement markers shall be as directed by the Engineer.
9. Removal of existing pavement markings and markers will be paid for directly in accordance with Item 677, "ELIMINATING EXISTING PAVEMENT MARKINGS AND MARKERS," unless otherwise stated in the plans.
10. Black-out marking tape may be used to cover conflicting existing markings for periods less than two weeks when approved by the Engineer.

Temporary Flexible-Reflective Roadway Marker Tabs

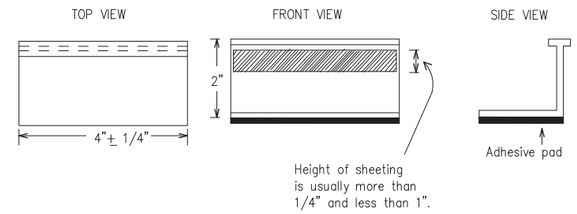

STAPLES OR NAILS SHALL NOT BE USED TO SECURE TEMPORARY FLEXIBLE-REFLECTIVE ROADWAY MARKER TABS TO THE PAVEMENT SURFACE

1. Temporary flexible-reflective roadway marker tabs used as guidemarks shall meet the requirements of DMS-8242.
2. Tabs detailed on this sheet are to be inspected and accepted by the Engineer or designated representative. Sampling and testing is not normally required, however at the option of the Engineer, either "A" or "B" below may be imposed to assure quality before placement on the roadway.
   A. Select five (5) or more tabs at random from each lot or shipment and submit to the Construction Division, Materials and Pavement Section to determine specification compliance.
   B. Select five (5) tabs and perform the following test. Affix five (5) tabs at 24 inch intervals on an asphaltic pavement in a straight line. Using a medium size passenger vehicle or pickup, run over the markers with the front and rear tires at a speed of 35 to 40 miles per hour, four (4) times in each direction. No more than one (1) out of the five (5) reflective surfaces shall be lost or displaced as a result of this test.
3. Small design variances may be noted between tab manufacturers.
4. See Standard Sheet WZ(STPM) for tab placement on new pavements. See Standard Sheet TCP(7-1) for tab placement on seal coat work.

RAISED PAVEMENT MARKERS USED AS GUIDEMARKS

1. Raised pavement markers used as guidemarks shall be from the approved product list, and meet the requirements of DMS-4200.
2. All temporary construction raised pavement markers provided on a project shall be of the same manufacturer.
3. Adhesive for guidemarks shall be bituminous material hot applied or butyl rubber pad for all surfaces, or thermoplastic for concrete surfaces.

Guidemarks shall be designated as:
YELLOW - (two amber reflective surfaces with yellow body).
WHITE - (one silver reflective surface with white body).

DEPARTMENTAL MATERIAL SPECIFICATIONS	
PAVEMENT MARKERS (REFLECTORIZED)	DMS-4200
TRAFFIC BUTTONS	DMS-4300
EPOXY AND ADHESIVES	DMS-6100
BITUMINOUS ADHESIVE FOR PAVEMENT MARKERS	DMS-6130
PERMANENT PREFABRICATED PAVEMENT MARKINGS	DMS-8240
TEMPORARY REMOVABLE, PREFABRICATED PAVEMENT MARKINGS	DMS-8241
TEMPORARY FLEXIBLE, REFLECTIVE ROADWAY MARKER TABS	DMS-8242

A list of prequalified reflective raised pavement markers, non-reflective traffic buttons, roadway marker tabs and other pavement markings can be found at the Material Producer List web address shown on BC(1).

Texas Department of Transportation — Traffic Safety Division Standard

BARRICADE AND CONSTRUCTION PAVEMENT MARKINGS

BC(11)-21

FILE: bc-21.dgn	DN: TxDOT	CK: TxDOT	DW: TxDOT	CK: TxDOT
©TxDOT February 1998	CONT	SECT	JOB	HIGHWAY
REVISIONS 2-98 9-07 5-21 1-02 7-13 11-02 8-14	DIST		SAT COUNTY	COMAL SHEET NO.
105				21 OF 97

DISCLAIMER: The use of this standard is governed by the "Texas Engineering Practice Act". No warranty of any kind is made by TxDOT for any purpose whatsoever. TxDOT assumes no responsibility for the conversion of this standard to other formats or for incorrect results or damages resulting from its use.

DATE: 2/8/2024
FILE: W:\00_TGC Project Files\NBR100\CAD\NBR100_GENERAL.dwg

PAVEMENT MARKING PATTERNS

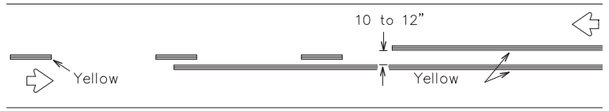

REFLECTORIZED PAVEMENT MARKINGS – PATTERN A

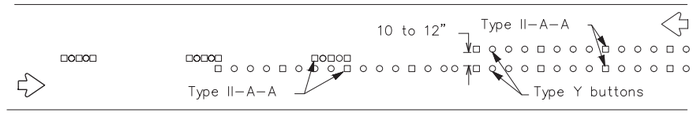

RAISED PAVEMENT MARKERS – PATTERN A

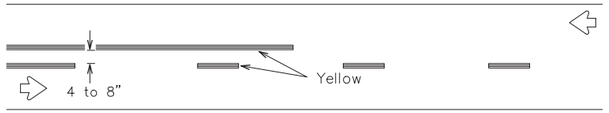

REFLECTORIZED PAVEMENT MARKINGS – PATTERN B

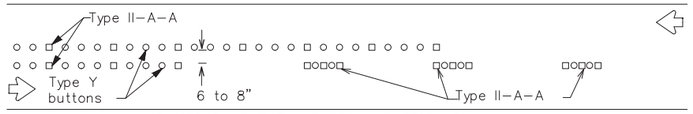

RAISED PAVEMENT MARKERS – PATTERN B

Pattern A is the TXDOT Standard, however Pattern B may be used if approved by the Engineer.
Prefabricated markings may be substituted for reflectorized pavement markings.

CENTER LINE & NO-PASSING ZONE BARRIER LINES FOR TWO-LANE, TWO-WAY HIGHWAYS

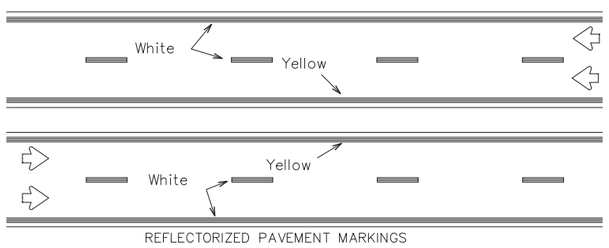

REFLECTORIZED PAVEMENT MARKINGS

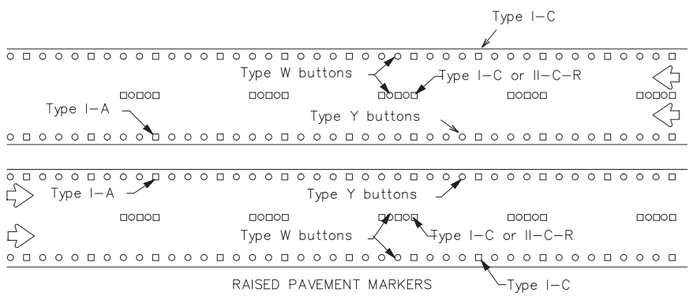

RAISED PAVEMENT MARKERS

Prefabricated markings may be substituted for reflectorized pavement markings.

EDGE & LANE LINES FOR DIVIDED HIGHWAY

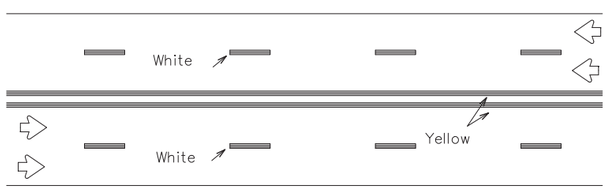

REFLECTORIZED PAVEMENT MARKINGS

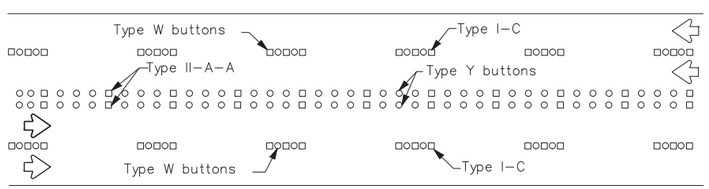

RAISED PAVEMENT MARKERS

Prefabricated markings may be substituted for reflectorized pavement markings.

LANE & CENTER LINES FOR MULTILANE UNDIVIDED HIGHWAYS

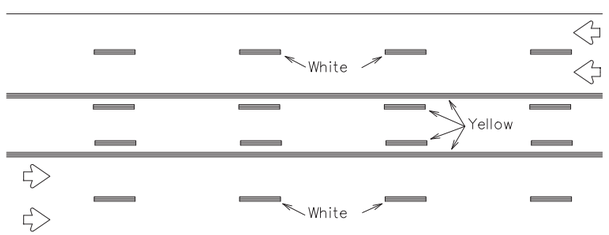

REFLECTORIZED PAVEMENT MARKINGS

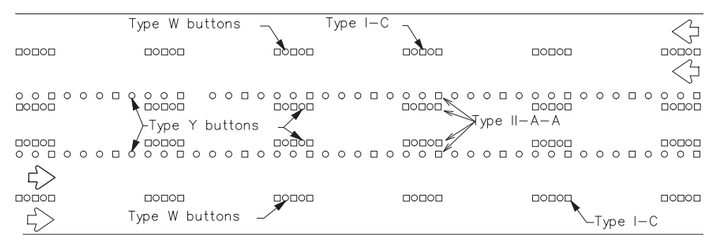

RAISED PAVEMENT MARKERS

Prefabricated markings may be substituted for reflectorized pavement markings.

TWO-WAY LEFT TURN LANE

STANDARD WORK ZONE PAVEMENT MARKINGS DETAILS

SOLID LINES

DOUBLE NO-PASSING LINE

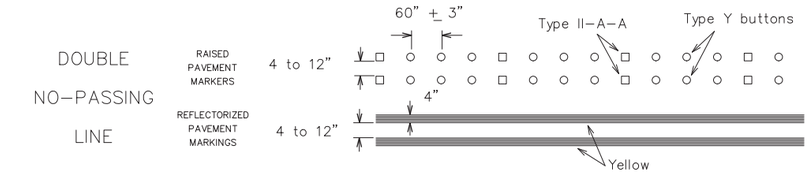

EDGE LINE OR SINGLE NO-PASSING LINE

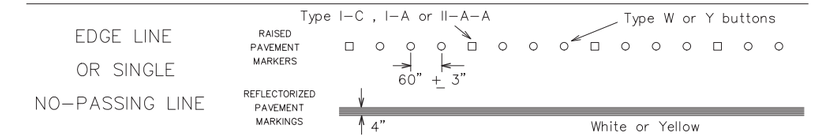

WIDE LINE

(FOR LEFT TURN CHANNELIZING LINE OR CHANNELIZING LINE USED TO DISCOURAGE LANE CHANGING.)

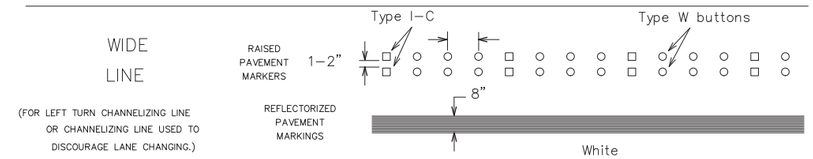

BROKEN LINES

CENTER LINE OR LANE LINE

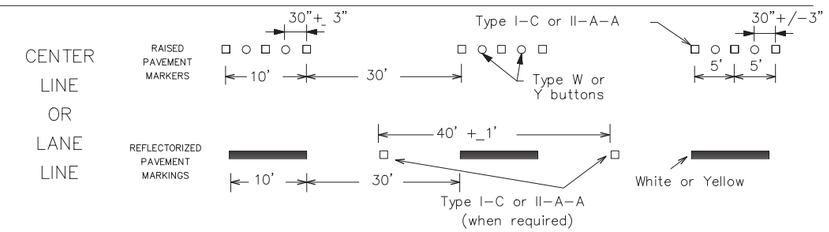

AUXILIARY OR LANEDROP LINE

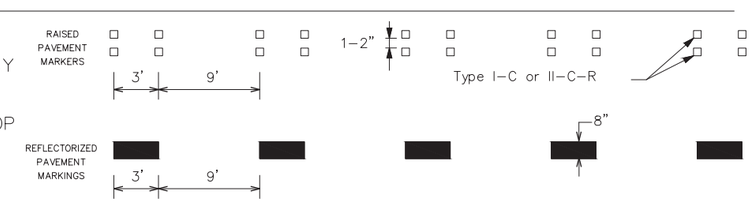

REMOVABLE MARKINGS WITH RAISED PAVEMENT MARKERS

If raised pavement markers are used to supplement REMOVABLE markings, the markers shall be applied to the top of the tape at the approximate mid length of tape used for broken lines or at 20 foot spacing for solid lines. This allows an easier removal of raised pavement markers and tape.

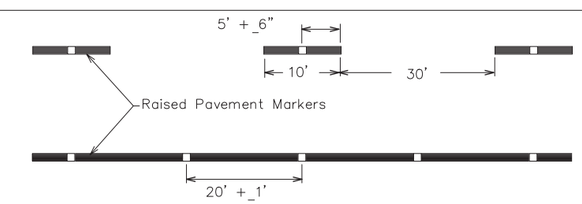

Centerline only – not to be used on edge lines

SHEET 12 OF 12

Raised pavement markers used as standard pavement markings shall be from the approved products list and meet the requirements of Item 672 "RAISED PAVEMENT MARKERS."

Texas Department of Transportation

Traffic Safety Division Standard

BARRICADE AND CONSTRUCTION PAVEMENT MARKING PATTERNS

BC(12)-21

FILE: bc-21.dgn	DN: TxDOT	CK: TxDOT	DW: TxDOT	CK: TxDOT
©TxDOT February 1998	CONT	SECT	JOB	HIGHWAY
REVISIONS 1-97 9-07 5-21 2-98 7-13 11-02 8-14			SAT	COMAL
	DIST		COUNTY	SHEET NO.
106				22 OF 97

DISCLAIMER: The use of this standard is governed by the "Texas Engineering Practice Act". No warranty of any kind is made by TxDOT for any purpose whatsoever. TxDOT assumes no responsibility for the conversion of this standard to other formats or for incorrect results or damages resulting from its use.

DATE: 2/8/2024
FILE: W:\00_TGC Project Files\NBR100\CAD\NBR100_GENERAL.dwg

DISCLAIMER: The use of this standard is governed by the "Texas Engineering Practice Act". No warranty of any kind is made by TxDOT for any purpose whatsoever. TxDOT assumes no responsibility for the conversion of this standard to other formats or for incorrect results or damages resulting from its use.

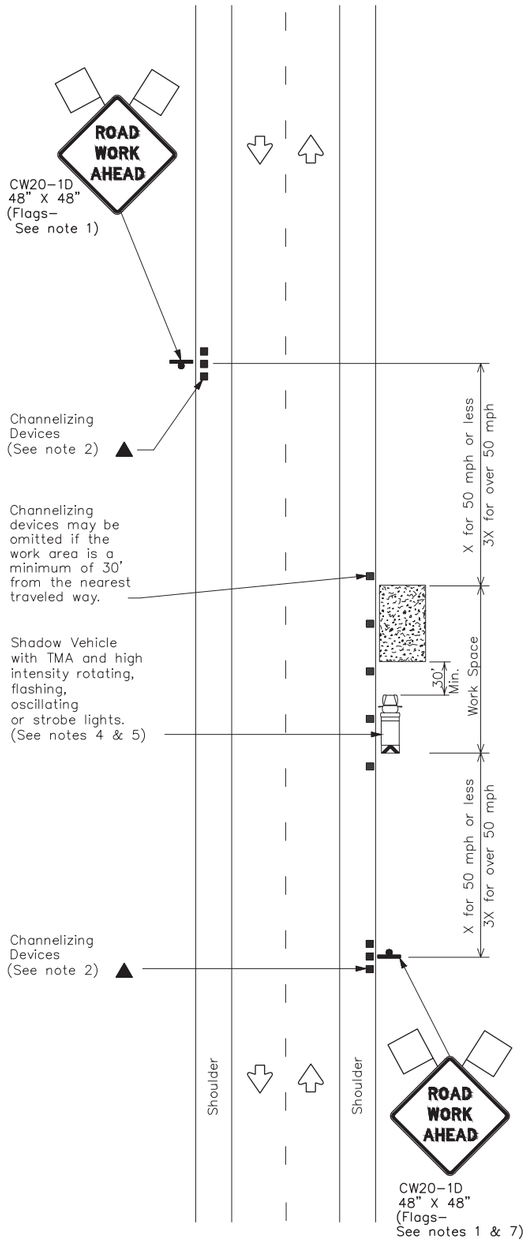

TCP (1-1a)

WORK SPACE NEAR SHOULDER

Conventional Roads

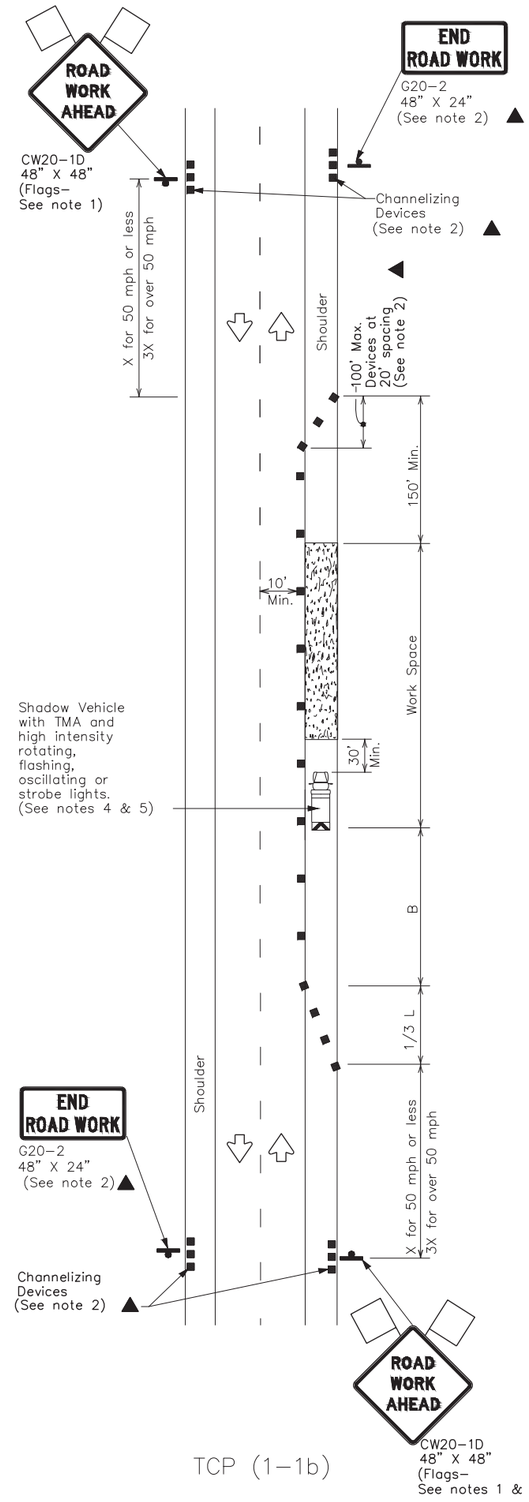

TCP (1-1b)

WORK SPACE ON SHOULDER

Conventional Roads

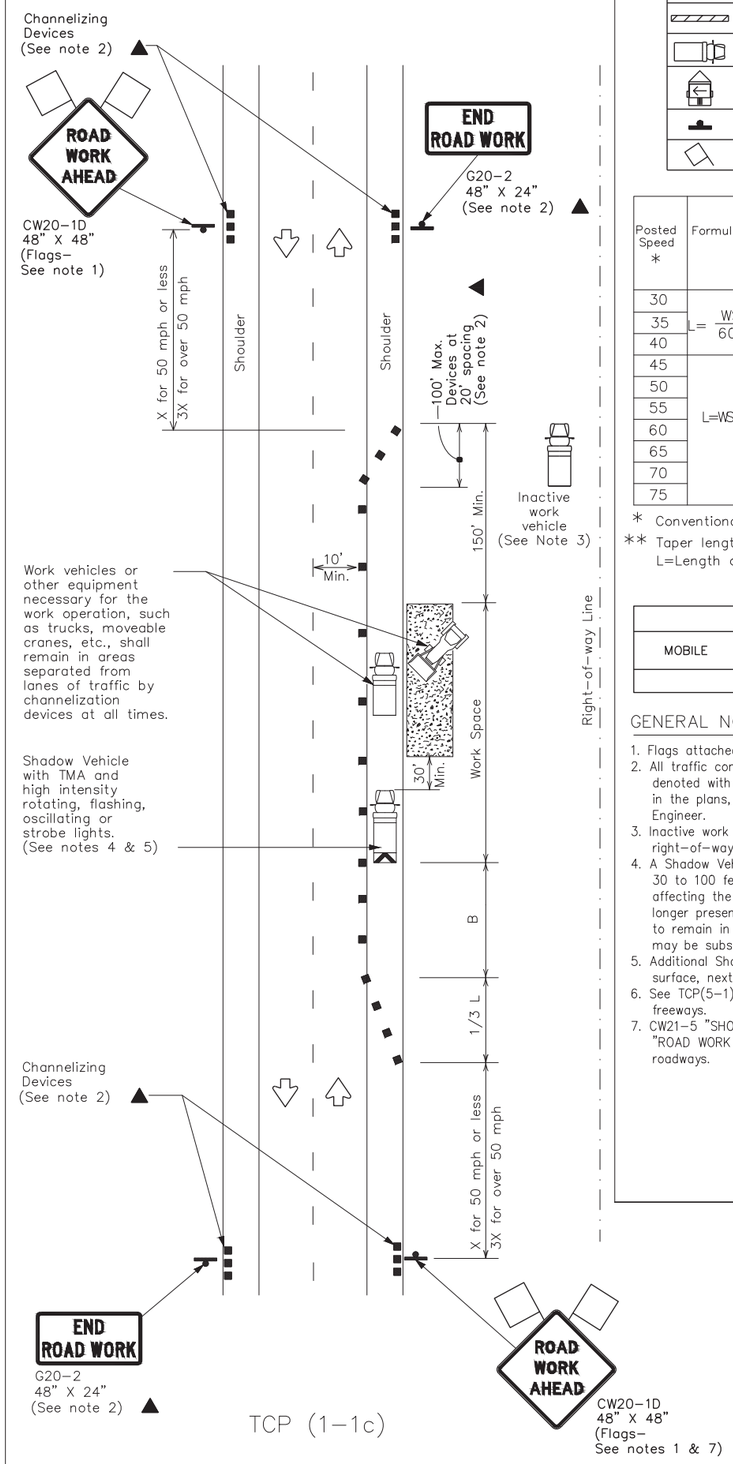

TCP (1-1c)

WORK VEHICLES ON SHOULDER

Conventional Roads

LEGEND			
	Type 3 Barricade		Channelizing Devices
	Heavy Work Vehicle		Truck Mounted Attenuator (TMA)
	Trailer Mounted Flashing Arrow Board		Portable Changeable Message Sign (PCMS)
	Sign		Traffic Flow
	Flag		Flagger

Posted Speed *	Formula	Minimum Desirable Taper Lengths **			Suggested Maximum Spacing of Channelizing Devices		Minimum Sign Spacing "X" Distance	Suggested Longitudinal Buffer Space "B"
		10' Offset	11' Offset	12' Offset	On a Taper	On a Tangent		
30	$L=\frac{WS^2}{60}$	150'	165'	180'	30'	60'	120'	90'
35		205'	225'	245'	35'	70'	160'	120'
40		265'	295'	320'	40'	80'	240'	155'
45	L=WS	450'	495'	540'	45'	90'	320'	195'
50		500'	550'	600'	50'	100'	400'	240'
55		550'	605'	660'	55'	110'	500'	295'
60		600'	660'	720'	60'	120'	600'	350'
65		650'	715'	780'	65'	130'	700'	410'
70		700'	770'	840'	70'	140'	800'	475'
75		750'	825'	900'	75'	150'	900'	540'

* Conventional Roads Only

** Taper lengths have been rounded off.
L=Length of Taper(FT) W=Width of Offset(FT) S=Posted Speed(MPH)

TYPICAL USAGE				
MOBILE	SHORT DURATION	SHORT TERM STATIONARY	INTERMEDIATE TERM STATIONARY	LONG TERM STATIONARY
	✓	✓		

GENERAL NOTES

1. Flags attached to signs where shown are REQUIRED.
2. All traffic control devices illustrated are REQUIRED, except those denoted with the triangle symbol may be omitted when stated elsewhere in the plans, or for routine maintenance work, when approved by the Engineer.
3. Inactive work vehicles or other equipment should be parked near the right-of-way line and not parked on the paved shoulder.
4. A Shadow Vehicle with a TMA should be used anytime it can be positioned 30 to 100 feet in advance of the area of crew exposure without adversely affecting the performance or quality of the work. If workers are no longer present but road or work conditions require the traffic control to remain in place, Type 3 Barricades or other channelizing devices may be substituted for the Shadow Vehicle and TMA.
5. Additional Shadow Vehicles with TMAs may be positioned off the paved surface, next to those shown in order to protect wider work spaces.
6. See TCP(5-1)for shoulder work on divided highways, expressways and freeways.
7. CW21-5 "SHOULDER WORK" signs may be used in place of CW20-1D "ROAD WORK AHEAD " signs for shoulder work on conventional roadways.

Texas Department of Transportation

Traffic Operations Division Standard

TRAFFIC CONTROL PLAN CONVENTIONAL ROAD SHOULDER WORK

TCP(1-1)-18

FILE: tcp1-1-18.dgn	DN:	CK:	DW:	CK:
©TxDOT December 1985	CONT	SECT	JOB	HIGHWAY
REVISIONS 2-94 4-98 8-95 2-12 1-97 2-18	0915	17	076	COMMON ST
	DIST		COUNTY	SHEET NO.
	SAT		COMAL	23 OF 97

151

DATE: 2/8/2024
FILE: W:\00_TGC Project Files\NBR100\CAD\NBR100_GENERAL.dwg

DISCLAIMER: The use of this standard is governed by the "Texas Engineering Practice Act". No warranty of any kind is made by TxDOT for any purpose whatsoever. TxDOT assumes no responsibility for the conversion of this standard to other formats or for incorrect results or damages resulting from its use.

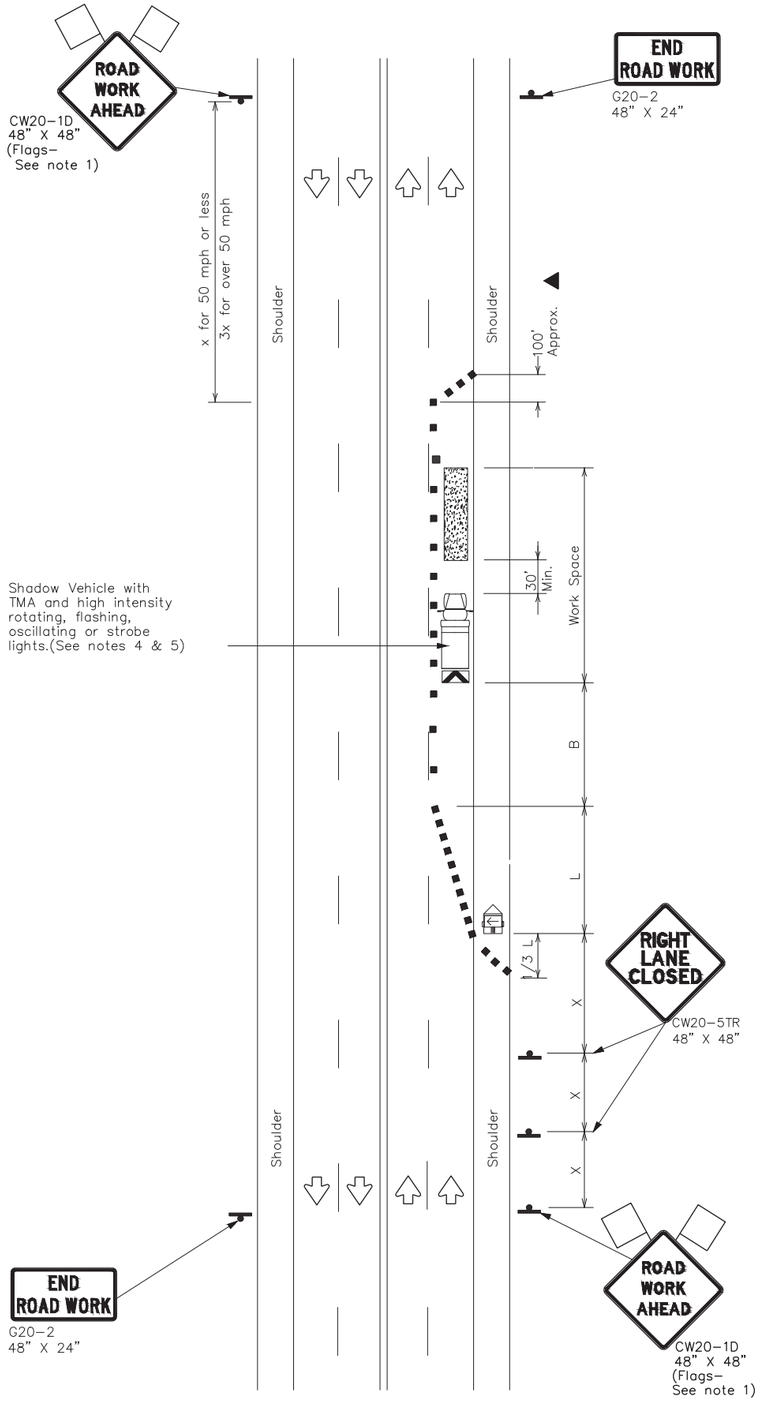

TCP (1-4a)

ONE LANE CLOSED

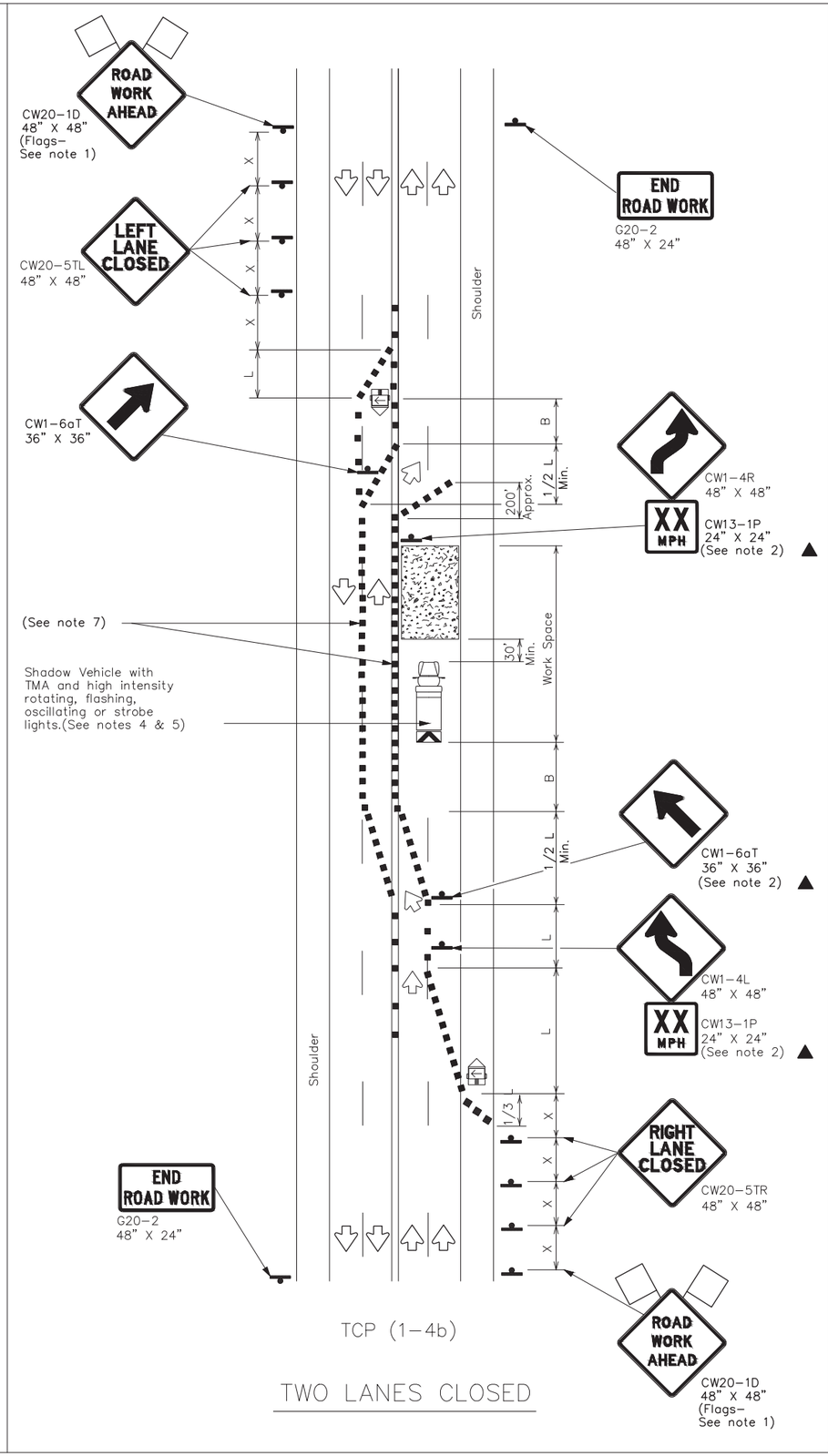

TCP (1-4b)

TWO LANES CLOSED

LEGEND			
	Type 3 Barricade		Channelizing Devices
	Heavy Work Vehicle		Truck Mounted Attenuator (TMA)
	Trailer Mounted Flashing Arrow Board	M	Portable Changeable Message Sign (PCMS)
	Sign		Traffic Flow
	Flag		Flagger

Posted Speed *	Formula	Minimum Desirable Taper Lengths **			Suggested Maximum Spacing of Channelizing Devices		Minimum Sign Spacing "X" Distance	Suggested Longitudinal Buffer Space "B"
		10' Offset	11' Offset	12' Offset	On a Taper	On a Tangent		
30	$L=\frac{WS^2}{60}$	150'	165'	180'	30'	60'	120'	90'
35		205'	225'	245'	35'	70'	160'	120'
40		265'	295'	320'	40'	80'	240'	155'
45	L=WS	450'	495'	540'	45'	90'	320'	195'
50		500'	550'	600'	50'	100'	400'	240'
55		550'	605'	660'	55'	110'	500'	295'
60		600'	660'	720'	60'	120'	600'	350'
65		650'	715'	780'	65'	130'	700'	410'
70		700'	770'	840'	70'	140'	800'	475'
75		750'	825'	900'	75'	150'	900'	540'

* Conventional Roads Only
** Taper lengths have been rounded off.
L=Length of Taper(FT) W=Width of Offset(FT) S=Posted Speed(MPH)

TYPICAL USAGE				
MOBILE	SHORT DURATION	SHORT TERM STATIONARY	INTERMEDIATE TERM STATIONARY	LONG TERM STATIONARY
	✓	✓		

GENERAL NOTES

1. Flags attached to signs where shown are REQUIRED.
2. All traffic control devices illustrated are REQUIRED, except those denoted with the triangle symbol may be omitted when stated elsewhere in the plans, or for routine maintenance work, when approved by the Engineer.
3. The CW20-1D "ROAD WORK AHEAD" sign may be repeated if the visibility of the work zone is less than 1500 feet.
4. A Shadow Vehicle with a TMA should be used anytime it can be positioned 30 to 100 feet in advance of the area of crew exposure without adversely affecting the performance or quality of the work. If workers are no longer present but road or work conditions require the traffic control to remain in place, Type 3 Barricades or other channelizing devices may be substituted for the Shadow Vehicle and TMA.
5. Additional Shadow Vehicles with TMAs may be positioned off the paved surface, next to those shown in order to protect wider work spaces.

TCP (1-4a)

6. If this TCP is used for a left lane closure , CW20-5TL "LEFT LANE CLOSED" signs shall be used and channelizing devices shall be placed on the centerline where needed to protect the work space from opposing traffic with the arrow panel placed in the closed lane near the end of the merging taper.

TCP (1-4b)

7. Where traffic is directed over a yellow centerline, channelizing devices which separate two-way traffic should be spaced on tapers at 20' or 15' if posted speeds are 35 mph or slower, and for tangent sections, at 1/2S where S is the speed in mph. This tighter device spacing is intended for the areas of conflicting markings, not the entire work zone.

Texas Department of Transportation — Traffic Operations Division Standard

TRAFFIC CONTROL PLAN LANE CLOSURES ON MULTILANE CONVENTIONAL ROADS

TCP(1-4)-18

FILE: tcp1-4-18.dgn	DN:	CK:	DW:	CK:
©TxDOT December 1985	CONT	SECT	JOB	HIGHWAY
REVISIONS 2-94 4-98 8-95 2-12 1-97 2-18	0915	17	076	COMMON ST
	DIST		COUNTY	SHEET NO.
	SAT		COMAL	24 OF 97

DATE: 2/8/2024
FILE: W:\00_TGC Project Files\NBR100\CAD\NBR100_GENERAL.dwg

DISCLAIMER: The use of this standard is governed by the "Texas Engineering Practice Act". No warranty of any kind is made by TxDOT for any purpose whatsoever. TxDOT assumes no responsibility for the conversion of this standard to other formats or for incorrect results or damages resulting from its use.

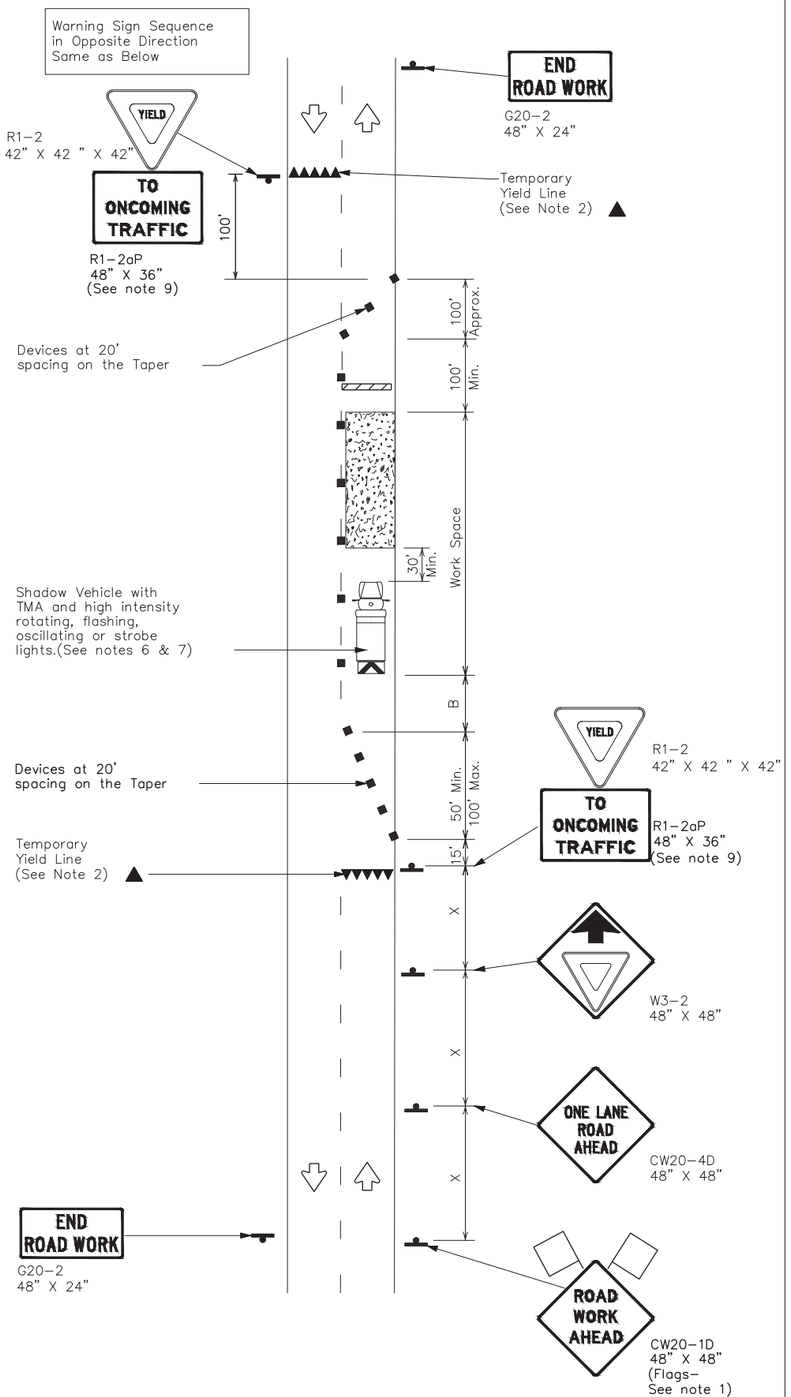

TCP (2-2a)
2-LANE ROADWAY WITHOUT PAVED SHOULDERS
ONE LANE TWO-WAY
CONTROL WITH YIELD SIGNS
(Less than 2000 ADT - See Note 9)

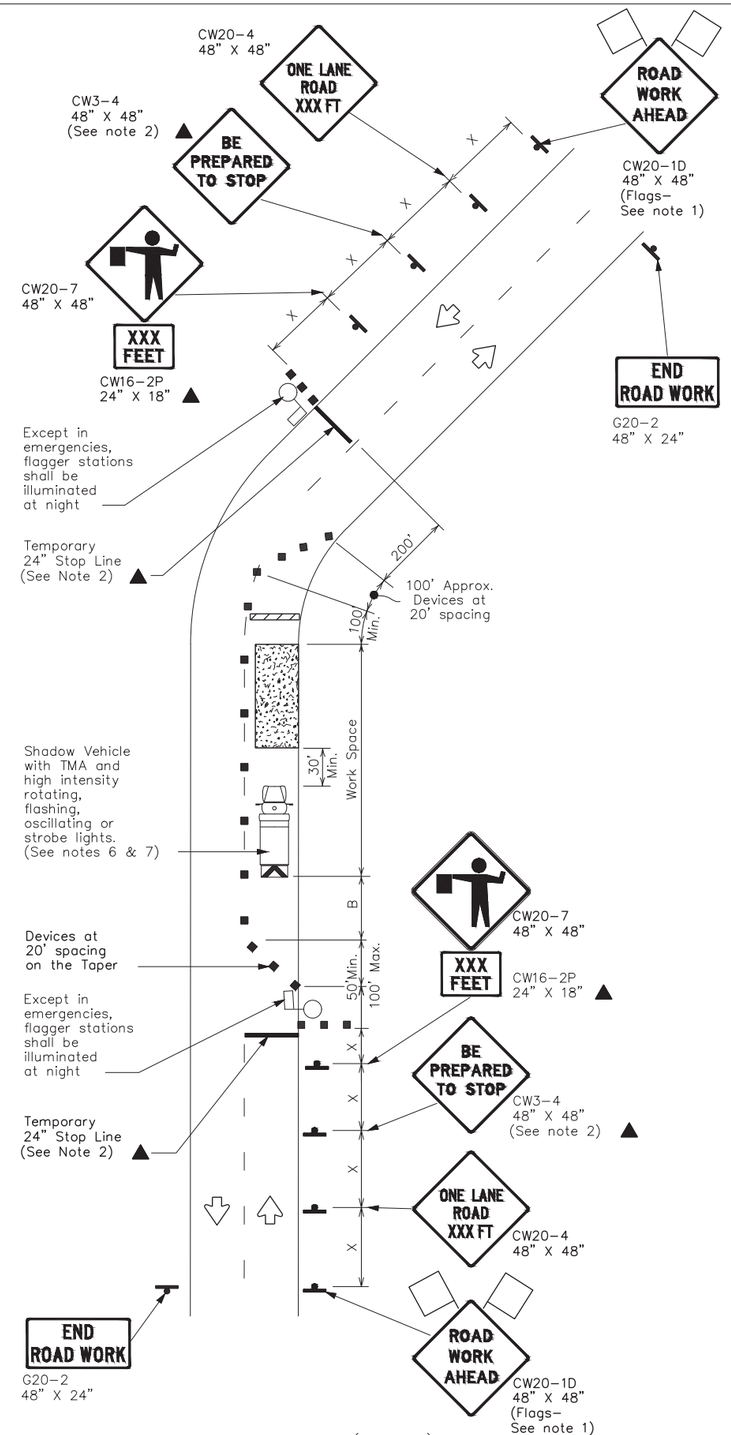

TCP (2-2b)
2-LANE ROADWAY WITHOUT PAVED SHOULDERS
ONE LANE TWO-WAY
CONTROL WITH FLAGGERS

LEGEND

	Type 3 Barricade		Channelizing Devices
	Heavy Work Vehicle		Truck Mounted Attenuator (TMA)
	Trailer Mounted Flashing Arrow Board	M	Portable Changeable Message Sign (PCMS)
	Sign		Traffic Flow
	Flag		Flagger

Posted Speed *	Formula	Minimum Desirable Taper Lengths **			Suggested Maximum Spacing of Channelizing Devices		Minimum Sign Spacing "X" Distance	Suggested Longitudinal Buffer Space "B"	Stopping Sight Distance
		10' Offset	11' Offset	12' Offset	On a Taper	On a Tangent			
30	$L=\frac{WS^2}{60}$	150'	165'	180'	30'	60'	120'	90'	200'
35		205'	225'	245'	35'	70'	160'	120'	250'
40		265'	295'	320'	40'	80'	240'	155'	305'
45	L=WS	450'	495'	540'	45'	90'	320'	195'	360'
50		500'	550'	600'	50'	100'	400'	240'	425'
55		550'	605'	660'	55'	110'	500'	295'	495'
60		600'	660'	720'	60'	120'	600'	350'	570'
65		650'	715'	780'	65'	130'	700'	410'	645'
70		700'	770'	840'	70'	140'	800'	475'	730'
75		750'	825'	900'	75'	150'	900'	540'	820'

* Conventional Roads Only
** Taper lengths have been rounded off.
L=Length of Taper(FT) W=Width of Offset(FT) S=Posted Speed(MPH)

TYPICAL USAGE				
MOBILE	SHORT DURATION	SHORT TERM STATIONARY	INTERMEDIATE TERM STATIONARY	LONG TERM STATIONARY
	✓	✓	✓	

GENERAL NOTES

1. Flags attached to signs where shown, are REQUIRED.
2. All traffic control devices illustrated are REQUIRED, except those denoted with the triangle symbol may be omitted when stated elsewhere in the plans, or for routine maintenance work, when approved by the Engineer.
3. The CW3-4 "BE PREPARED TO STOP" sign may be installed after the CW20-4 "ONE LANE ROAD XXX FT" sign, but proper sign spacing shall be maintained.
4. Flaggers should use two-way radios or other methods of communication to control traffic.
5. Length of work space should be based on the ability of flaggers to communicate.
6. A Shadow Vehicle with a TMA should be used anytime it can be positioned 30 to 100 feet in advance of the area of crew exposure without adversely affecting the performance or quality of the work. If workers are no longer present but road or work conditions require the traffic control to remain in place, Type 3 Barricades or other channelizing devices may be substituted for the Shadow Vehicle and TMA.
7. Additional Shadow Vehicles with TMAs may be positioned off the paved surface, next to those shown in order to protect a wider work space.

TCP (2-2a)

8. The R1-2 "YIELD" sign traffic control may be used on projects with approaches that have adequate sight distance. For projects in urban areas, work space should be no longer than one half city block. In rural areas, roadways with less than 2000 ADT, work space should be no longer than 400 feet.
9. The R1-2aP "YIELD TO ONCOMING TRAFFIC" sign shall be placed on a support at a 7 foot minimum mounting height.

TCP (2-2b)

10. Channelizing devices on the center line may be omitted when a pilot car is leading traffic and approved by the Engineer.
11. If the work space is located near a horizontal or vertical curve, the buffer distances should be increased in order to maintain stopping sight distance to the flagger and a queue of stopped vehicles. (See table above).
12. Flaggers should use 24" STOP/SLOW paddles to control traffic. Flags should be limited to emergency situtations.

Texas Department of Transportation
Traffic Operations Division Standard

TRAFFIC CONTROL PLAN ONE-LANE TWO-WAY TRAFFIC CONTROL

TCP(2-2)-18

FILE: tcp2-2-18.dgn	DN:	CK:	DW:	CK:
©TxDOT December 1985	CONT	SECT	JOB	HIGHWAY
REVISIONS	0915	17	076	COMMON ST
8-95 3-03	DIST		COUNTY	SHEET NO.
1-97 2-12				
4-98 2-18	SAT		COMAL	25 OF 97

DATE: 2/8/2024
FILE: W:\00_TGC Project Files\NBR100\CAD\NBR100_GENERAL.dwg

DISCLAIMER: The use of this standard is governed by the "Texas Engineering Practice Act". No warranty of any kind is made by TxDOT for any purpose whatsoever. TxDOT assumes no responsibility for the conversion of this standard to other formats or for incorrect results or damages resulting from its use.

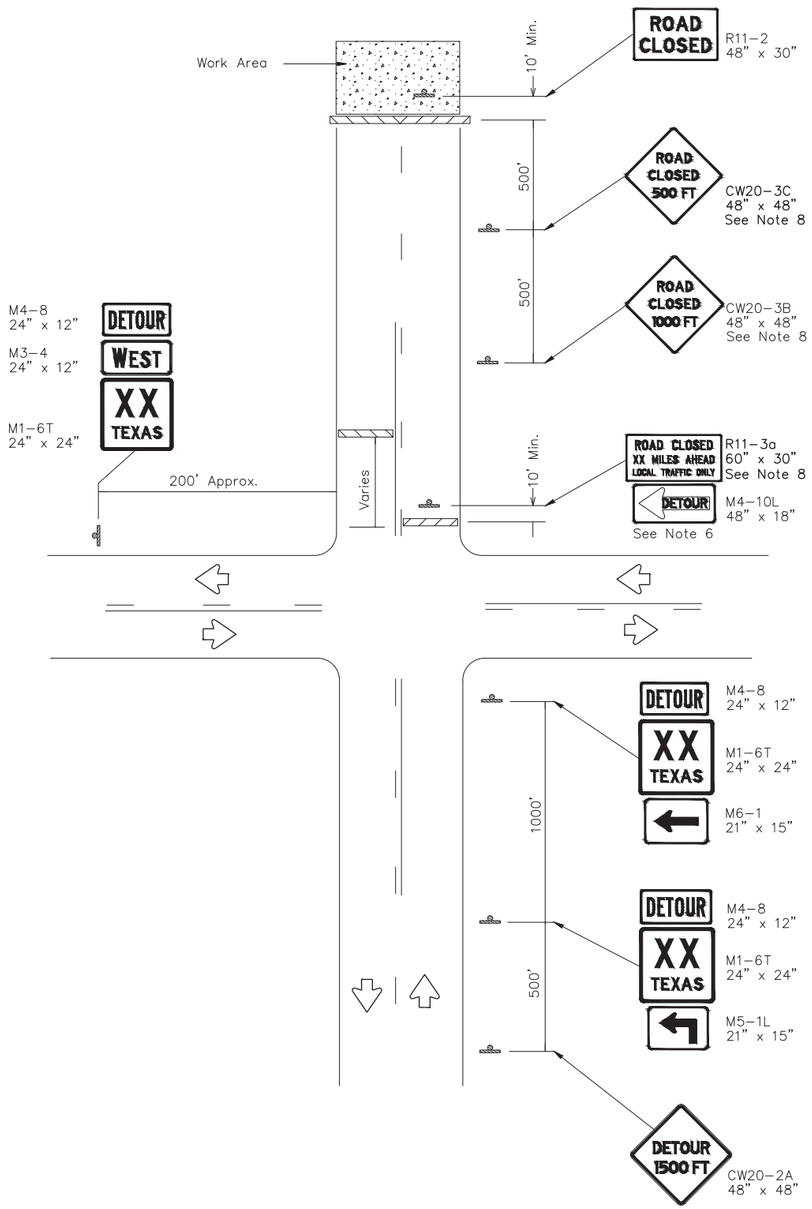

ROAD CLOSURE BEYOND THE INTERSECTION

Signing for a Numbered Route with an Off-Site Detour

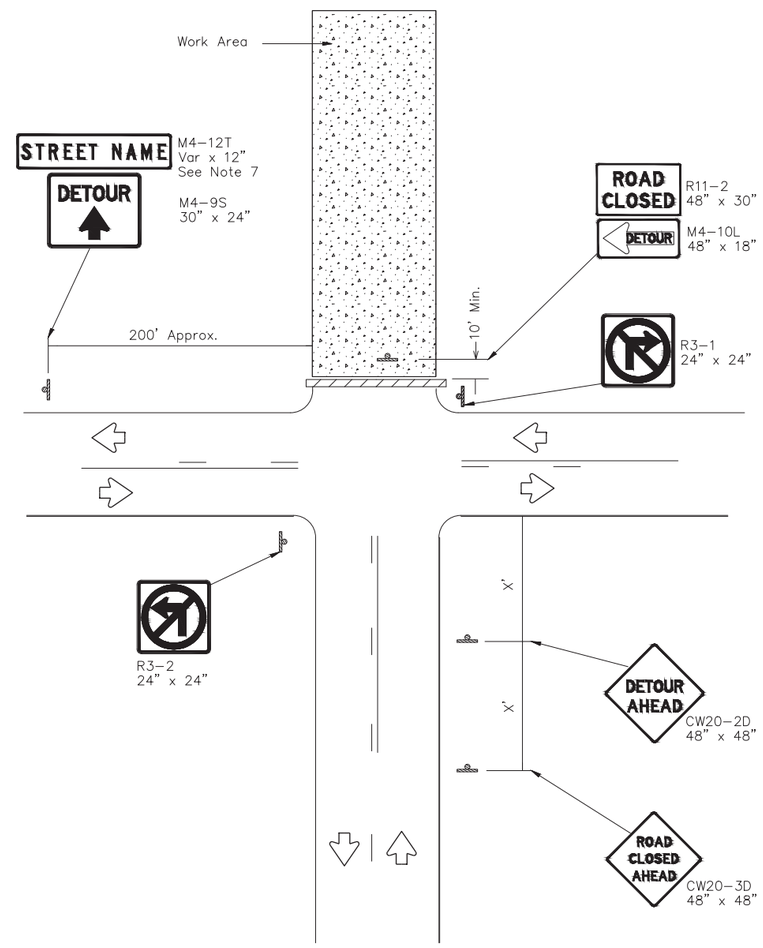

ROAD CLOSURE AT THE INTERSECTION

Signing for an Un-numbered Route with an Off-Site Detour

LEGEND	
	Type 3 Barricade
	Sign

Posted Speed *	Minimum Sign Spacing "X" Distance
30	120'
35	160'
40	240'
45	320'
50	400'
55	500'
60	600'
65	700'
70	800'
75	900'

* Conventional Roads Only

GENERAL NOTES

1. This sheet is intended to provide details for temporary work zone road closures. For permanent road closure details see the D&OM standards.
2. Barricades used shall meet the requirements shown on Barricade and Construction Standard BC(10) and listed on the Compliant Work Zone Traffic Control Devices list (CWZTCD).
3. Stockpiled materials shall not be placed on the traffic side of barricades.
4. Barricades at the road closure should extend from pavement edge to pavement edge.
5. Detour signing shown is intended to illustrate the type of signing that is appropriate for numbered routes or un-numbered routes as labeled. It does not indicate the full extent of detour signing required. Detour routes should be signed as shown elsewhere in the plans.
6. If the road is open for a significant distance beyond the intersection or there are significant origin/destination points beyond the intersection, the signs and barricades at this location should be located at the edge of the traveled way.
7. The Street Name (M4-12T) sign is to be placed above the DETOUR (M4-9S) sign.
8. For urban areas where there is a shorter distance between the intersection and the actual closure location, the ROAD CLOSED XX MILES AHEAD (R11-3a) sign may be replaced with a ROAD CLOSED TO THRU TRAFFIC (R11-4) sign. If adequate space does not exist between the intersection and the closure a single ROAD CLOSED AHEAD (CW20-3D) sign spaced as per the table above may replace the ROAD CLOSED 1000 FT (CW20-3B) and ROAD CLOSED 500 FT (CW20-3C) signs.
9. Signs and barricades shown shall be subsidiary to Item 502. Locations where these details will be required shall be as shown elsewhere in the plans.

Texas Department of Transportation

Traffic Operations Division Standard

WORK ZONE ROAD CLOSURE DETAILS

WZ(RCD)-13

FILE: wzrcd-13.dgn	DN: TxDOT	CK: TxDOT	DW: TxDOT	CK: TxDOT
©TxDOT August 1995	CONT	SECT	JOB	HIGHWAY
REVISIONS	0915	17	076	COMMON ST
1-97 4-98 7-13	DIST		COUNTY	SHEET NO.
2-98 3-03	SAT		COMAL	26 OF 97

113

DATE: 2/8/2024
FILE: W:\00_TGC Project Files\NBR100\CAD\NBR100_GENERAL.dwg

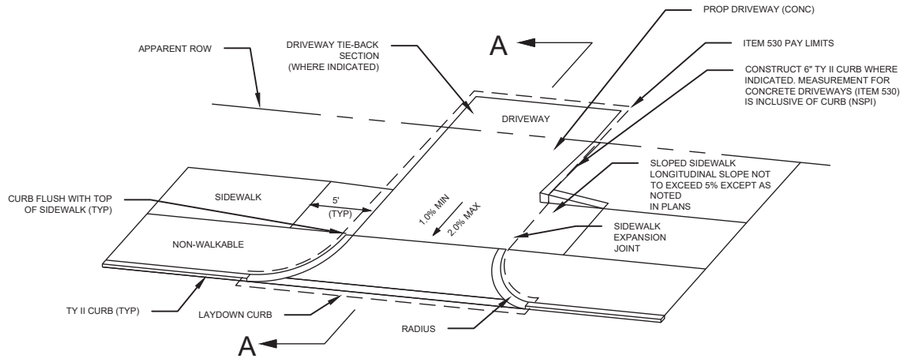

SIDEWALK OFFSET FROM CURB DETAILS

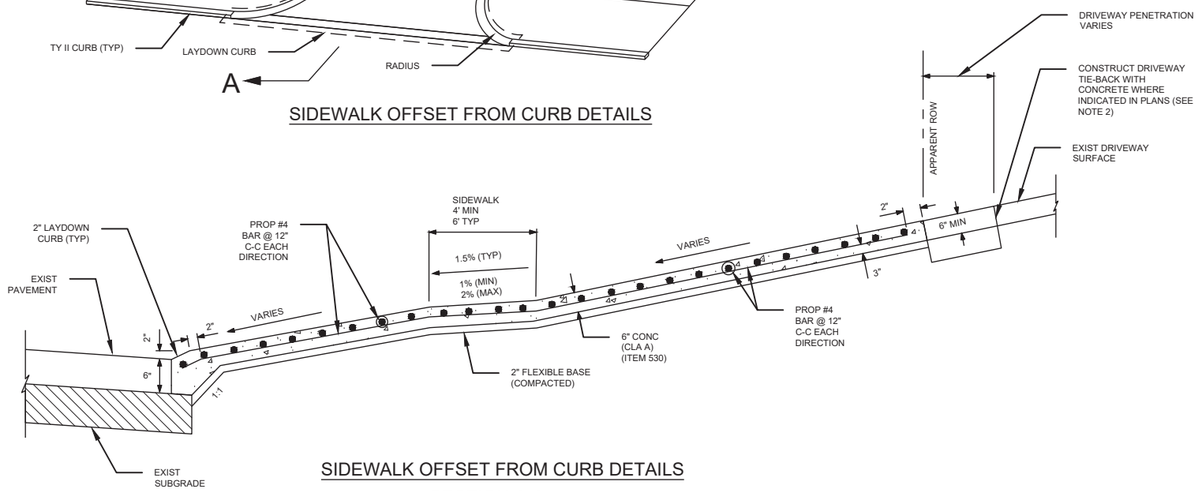

SIDEWALK OFFSET FROM CURB DETAILS

SECTION A-A

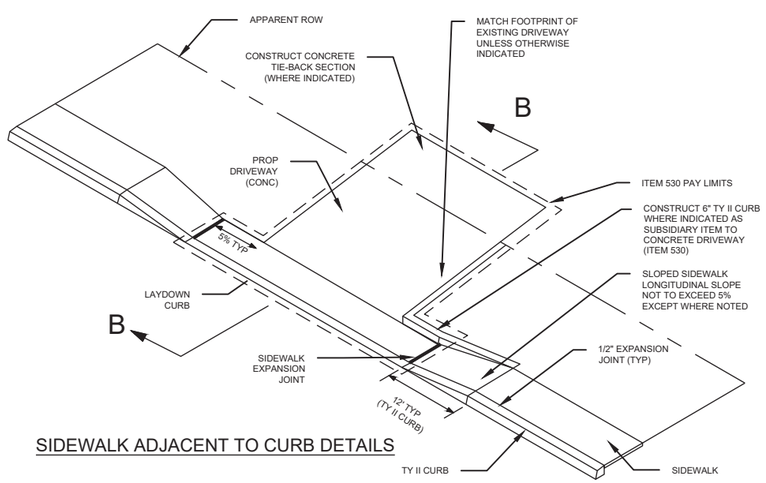

SIDEWALK ADJACENT TO CURB DETAILS

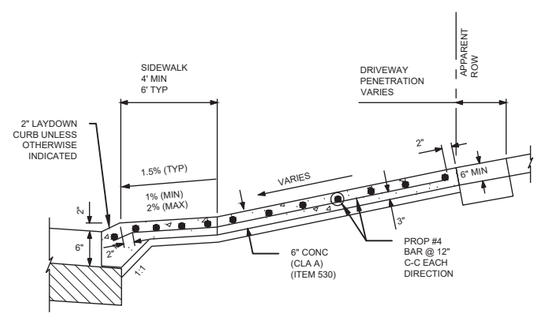

SIDEWALK ADJACENT TO CURB DETAILS

SECTION B-B

DRIVEWAY DETAILS

NOTES:

1) SLOPED SIDEWALK SEGMENT LENGTHS ARE SHOWN TO CONSERVATIVELY ACCOMMODATE STANDARD CURB HEIGHTS ON LEVEL STREETS. SOME SEGMENTS MAY REQUIRE ADDITIONAL LENGTH TO ENSURE LONGITUDINAL SLOPES DO NOT EXCEED 5% OR ROADWAY SLOPE (WHICHEVER IS GREATER). WITH THE APPROVAL OF THE ENGINEER, THE CONTRACTOR MAY EXTEND SEGMENT TO NEXT PLANAR ELEMENT OR UNTIL THE SLOPED SIDEWALK REACHES CURB HEIGHT, WHICHEVER IS SHORTER.
2) IF EXISTING DRIVEWAY IS CONCRETE OR ASPHALT, SAWCUT EXISTING SURFACE AT TIE-BACK LOCATION MIN 1/2" AND BREAKBACK, CLEAN, AND EXPOSE STEEL REINFORCING IF PRESENT. INSTALL FLEXIBLE BASE AS INDICATED. CONSTRUCT CONCRETE DRIVEWAY PER ITEM 530.
3) MAXIMUM DRIVEWAY GRADES SHOULD BE LIMITED TO 12 PERCENT.
4) REFER TO DRIVEWAY DETAILS ON SHEET 50 AND 51. IN CASE OF CONFLICT NOTIFY THE ENGINEER. MOST STRINGENT REQUIREMENTS MAY APPLY.

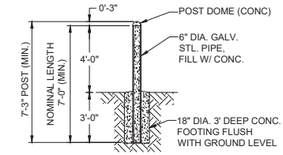

GALVANIZED STEEL BOLLARD DETAIL

N.T.S.

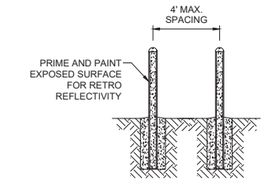

BOLLARD SPACING

N.T.S.

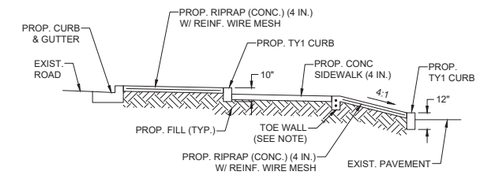

RIPRAP (CONC) (4 IN) APRON TYPICAL SECTION

N.T.S.

NOTE: HORIZONTAL AND VERTICAL REINFORCING BARS SHALL BE IN ACCORDANCE WITH CONCRETE CURB (TY I) W/ CONCRETE PAVEMENT DETAIL (SHEET 54)

PEDESTRIAN WARNING SIGNS

LOCATION	OFFSET	ACTIVITY	SIGN NO.	DESCRIPTION	DIMENSIONS	TMUTCD REF.
15+16	26.94R	RELOCATE	W11-2	PEDESTRIAN CROSSING	30"X30"	2C.50
15+16	26.94R	RELOCATE	W16-7P	DIAGONAL DOWNWARD ARROW	12"X24"	2C.50
15+27	28.28L	RELOCATE	W11-2	PEDESTRIAN CROSSING	30"X30"	2C.50
15+27	28.28L	RELOCATE	W16-7P	DIAGONAL DOWNWARD ARROW	12"X24"	2C.50
26+47	27.40R	RELOCATE	W11-2	PEDESTRIAN CROSSING	30"X30"	2C.50
26+47	27.40R	RELOCATE	W16-7P	DIAGONAL DOWNWARD ARROW	12"X24"	2C.50
26+57	27.75L	RELOCATE	W11-2	PEDESTRIAN CROSSING	30"X30"	2C.50
26+57	27.75L	RELOCATE	W16-7P	DIAGONAL DOWNWARD ARROW	12"X24"	2C.50
43+63	26.00R	ADD	W11-2	PEDESTRIAN CROSSING	30"X30"	2C.50
43+63	26.00R	ADD	W16-7P	DIAGONAL DOWNWARD ARROW	12"X24"	2C.50
44+06	26.42L	ADD	W11-2	PEDESTRIAN CROSSING	30"X30"	2C.50
44+06	26.42L	ADD	W16-7P	DIAGONAL DOWNWARD ARROW	12"X24"	2C.50

W11-2 SIGN

W16-7P SIGN

REV	DESCRIPTION	DATE	APPR
0	ISSUED FOR BID	02/12/24	AG

MISCELLANEOUS DETAILS 1

COMMON STREET PEDESTRIAN IMPROVEMENTS

CITY OF NEW BRAUNFELS
550 Landa Street | New Braunfels, TX 78130

DESIGN BY: KM
DRAWN BY: EFC
CHECKED BY: JB
APPROVED BY: AG

City of New Braunfels

ENGINEER:
THE GOODMAN CORPORATION
3200 TRAVIS, SUITE 200
HOUSTON, TEXAS 77006
www.TheGoodmanCorp.com
(713) 951-7951
TBPELS Firm Registration No. 19990

SURVEYOR:
MBCO ENGINEERING + SURVEYING

STATE OF TEXAS
ASHISH GHOSH
111103
LICENSED
PROFESSIONAL ENGINEER
2/13/2024

DATE: 02/12/2024
SCALE: AS NOTED

SHEET NUMBER
27 OF 97

W:\00_TGC Project Files\NBR100\CAD\NBR100_GENERAL.dwg, 2/12/2024

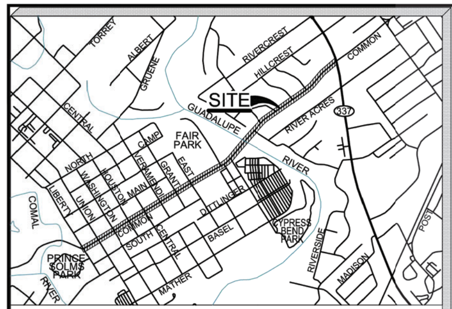

VICINITY MAP
(NOT TO SCALE)

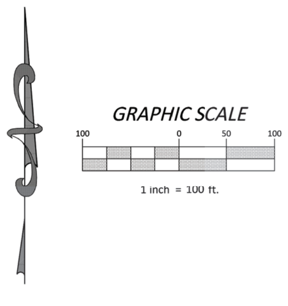

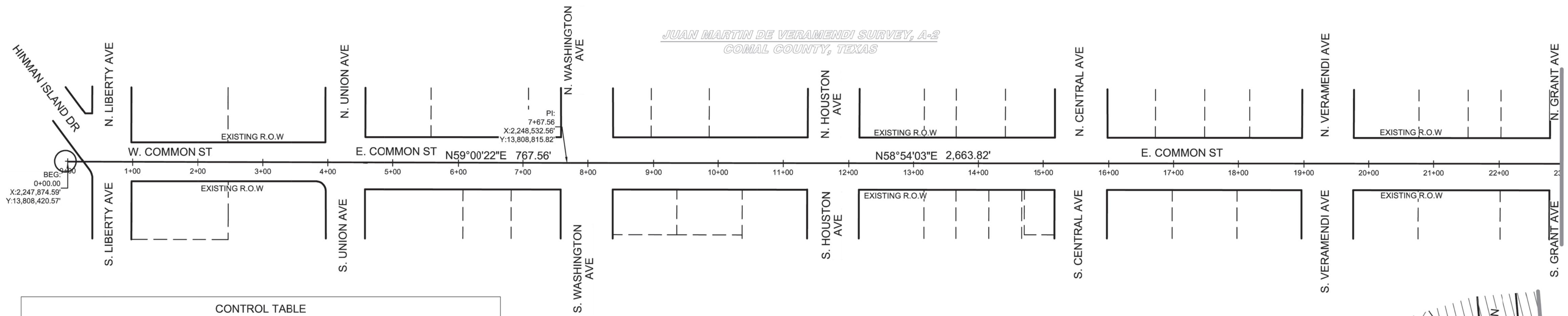

CONTROL TABLE							
POINT No.	NORTHING	EASTING	ELEVATION	DESCRIPTION	STATION	OFFSET	ALIGNMENT
1	13,812,283.01	2,253,041.10	670.46'	COTTON SPINDLE	65+01.08	34.45' LT	COMMON STREET
2	13,811,549.27	2,252,235.14	627.14'	5/8" IRON ROD WCS "MBCO"	54+04.25	32.91' LT	COMMON STREET
3	13,811,040.32	2,251,564.21	607.97'	"X" CUT IN CONCRETE	45+67.60	26.37' LT	COMMON STREET
4	13,810,258.84	2,250,982.64	636.22'	5/8" IRON ROD WCS "MBCO"	36+00.82	49.78' RT	COMMON STREET
5	13,809,466.64	2,249,557.03	653.78'	5/8" IRON ROD WCS "MBCO"	19+80.68	28.12' LT	COMMON STREET
6	13,808,629.45	2,248,298.16	652.28'	COTTON SPINDLE	4+70.59	39.05' RT	COMMON STREET
7	13,808,449.86	2,247,841.11	636.03'	5/8" IRON ROD WCS "MBCO"	-01+13.61	42.34' LT	COMMON STREET

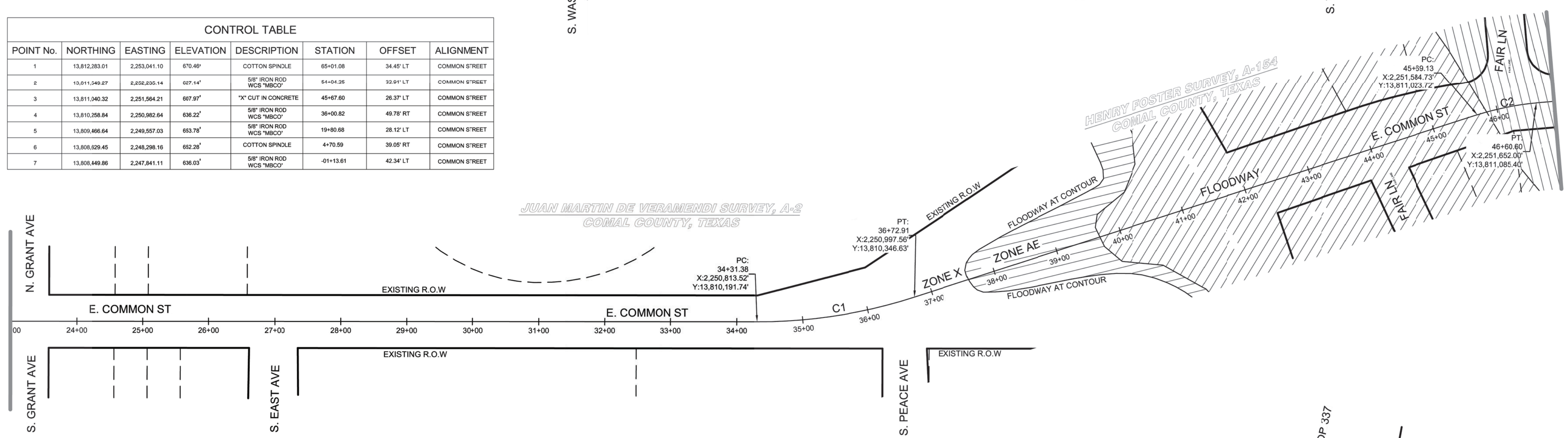

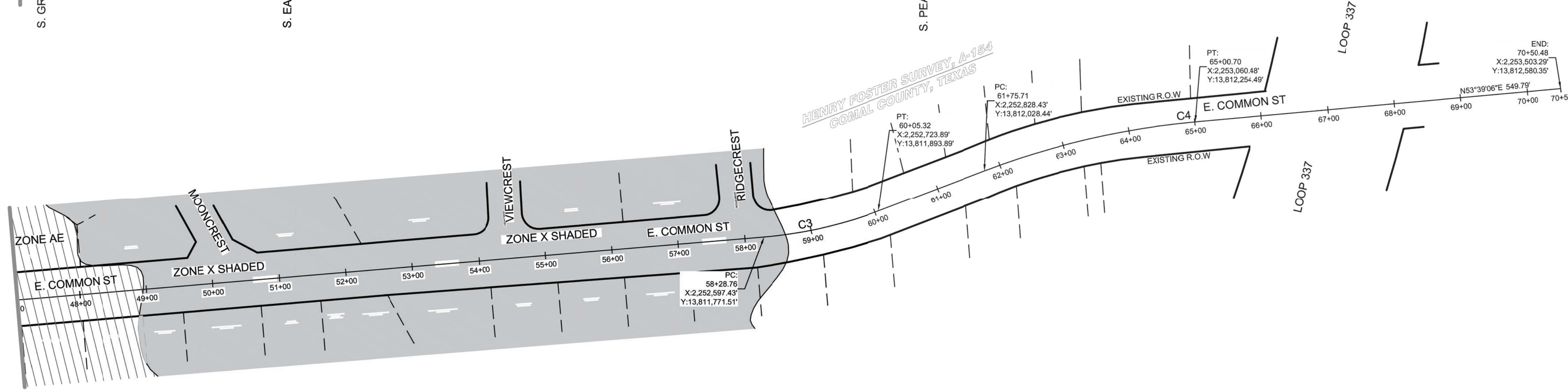

NOTES:

THIS SURVEY REPRESENTS A TOPOGRAPHIC SURVEY OF SUBJECT PROPERTY AND IS NOT A BOUNDARY SURVEY. PROPERTY INFORMATION SHOWN FROM DEEDS, PLATS AND/OR GIS DATA FOR THE SURVEYED PREMISES AND WAS PERFORMED WITHOUT THE BENEFIT OF A TITLE COMMITMENT. EASEMENTS AND RESTRICTIONS MAY EXIST WHICH ARE NOT REFERENCED HEREON; NO ADDITIONAL RESEARCH REGARDING THE EXISTENCE OF EASEMENTS OR RESTRICTIONS OF RECORD HAS BEEN PERFORMED BY MBCO ENGINEERING LLC.

THIS TRACT LIES PARTIALLY IN ZONE "X" (UNSHADED), DESIGNATED AS "AREAS DETERMINED TO BE OUTSIDE THE 0.2% ANNUAL CHANCE FLOODPLAIN", IN ZONE "X" (SHADED), DESIGNATED AS "AREAS OF THE 0.2% ANNUAL CHANCE FLOOD; AREAS OF THE 1% ANNUAL CHANCE FLOOD WITH AVERAGE DEPTHS LESS THAN 1 FOOT OR WITH DRAINAGE AREAS LESS THAN 1 SQUARE MILE; AND AREAS PROTECTED BY LEVEES FORM 1% ANNUAL CHANCE FLOOD", AND THIS TRACT LIES PARTIALLY IN ZONE "AE", DEFINED AS "SPECIAL FLOOD HAZARD AREAS SUBJECT TO INUNDATION BY THE 0.1% ANNUAL CHANCE FLOOD EVENT, WHERE THE BASE FLOOD ELEVATIONS ARE DETERMINED", AS PER THE NATIONAL FLOOD INSURANCE PROGRAM FIRM COMMUNITY PANEL NUMBER 48091C0455F, LATEST AVAILABLE PUBLISHED REVISION DATED SEPTEMBER 2, 2009. THE BASE FLOOD ELEVATION(S) AS PUBLISHED ARE 618', 620' AND 621'.

A ZONING REPORT WAS NOT PROVIDED AT THE TIME OF THIS SURVEY; HOWEVER, THIS TRACT IS SUBJECT TO THE DEVELOPMENTAL REQUIREMENTS OF THE CITY OF NEW BRAUNFELS, TEXAS AND COMAL COUNTY.

THERE ARE NO NATURAL DRAINAGE COURSES ON THE SUBJECT TRACT.

MINERAL RIGHTS AND/OR LEASE RIGHTS ARE NOT SURVEY RELATED AND THEREFORE NOT A PART OF THIS SURVEY.

SURFACE OR SUBSURFACE FAULTING, HAZARDOUS WASTE OR OTHER ENVIRONMENTAL ISSUES HAVE NOT BEEN ADDRESSED WITHIN THE SCOPE OF THIS SURVEY.

FENCE LINES, TREE DRIP LINES AND/OR LIMITS OF VEGETATION/WOODED AREAS SHOWN HEREON ARE GRAPHIC, WITH DIMENSIONED TIES SHOWN AT SPECIFIC LOCATIONS WHERE THEY WERE PHYSICALLY MEASURED; SAID LINES MAY MEANDER BETWEEN SAID LOCATIONS.

UNDERGROUND UTILITIES AS SHOWN HEREON ARE DERIVED FROM FIELD SURVEYS, RECORD DRAWINGS, AND/OR TONE MARKS PROVIDED BY 811. CONTRACTOR TO VERIFY ACTUAL LOCATION AND EXISTENCE OF UNDERGROUND UTILITIES PRIOR TO CONSTRUCTION.

THE ACTUAL LOCATION OF ANY PIPELINES WITHIN THE EASEMENT, THE SIZE OF THE PIPE AND PRODUCT CARRIED MAY DETERMINE IF A SETBACK BEYOND THE EDGE OF THE EASEMENT IS REQUIRED BY THE OPERATOR.

ELEVATIONS DETAIL SHOWN ON THE SURVEYED PREMISES CAN BE VIEWED IN GREATER DETAIL ON THE TOPOGRAPHIC BASE DRAWING AND/OR THE PROJECT POINT FILE ATTACHED TO THE DELIVERABLE PACKAGE. TO VIEW ALL SURVEY POINTS AND DESCRIPTIONS SET THE _ALL POINTS GROUP TO THE TOP OF THE POINT GROUP HIERARCHY UNDER POINT GROUP PROPERTIES IN THE TOOLSPACE DIALOG OF THE PROSPECTOR TAB.

BURIED UTILITIES HAVE BEEN ROUTED BY CONNECTING VISIBLE SURFACE APPURTENANCES IN COMBINATION WITH RECORD DRAWING LOCATIONS. THERE MAY EXIST ADDITIONAL, BURIED UTILITIES WHICH HAVE NOT BEEN FIELD VERIFIED AND/OR REFERENCED HEREON. THE CONTRACTOR SHOULD VERIFY THE HORIZONTAL AND VERTICAL LOCATIONS OF ALL UTILITIES BEFORE COMMENCING CONSTRUCTION.

SITE BENCHMARK:

VERTICAL DATUM: NAVD 88 GEOID 18, BY GPS OBSERVATION
HORIZONTAL DATUM: TEXAS STATE PLANE COORDINATE SYSTEM NAD83 TEXAS SOUTH CENTRAL ZONE (4204) NAD 83
NO PUBLISHED MARK WAS REFERENCED

COMBINED SCALE FACTOR NOTE:

COORDINATE REFERENCED HEREON ARE SURFACE VALUES AND MAY BE CONVERTED TO GRID VALUES BY DIVIDING THE FOLLOWING COMBINED SCALE FACTOR OF 1.00014.

TEMPORARY BENCHMARKS (TBM'S):

TBM "1":
CONTROL POINT #1 - COTTON SPINDLE LOCATED ON THE NORTH SIDE OF COMMON STREET APPROXIMATELY 190' SOUTHWEST OF COMMON STREET AND LOOP 337/SH 46 INTERSECTION.
ELEVATION = 670.45'

TBM "4":
CONTROL POINT #4 - 5/8" IRON ROD WCS "MBCO" LOCATED ON THE SOUTH SIDE OF COMMON STREET APPROXIMATELY 75' SOUTH OF COMMON STREET AND PEACE AVENUE INTERSECTION.
ELEVATION = 636.22'

TBM "7":
CONTROL POINT #7 - 5/8" IRON ROD WCS "MBCO" LOCATED ON THE SOUTH SIDE OF HINMAN ISLAND DRIVE APPROXIMATELY 89' SOUTHWEST OF HINMAN ISLAND DRIVE, WEST COMMON STREET AND NORTH LIBERTY AVENUE INTERSECTION.
ELEVATION = 636.03'

SYMBOL LEGEND:

BACK FLOW PREVENTER
"BB" INLET
BENCHMARK
BOLLARD / POST
BRACE POLE
BUSINESS SIGN (SEE DESCRIPTION)
BURIED CABLE MARKER
CLEAN OUT
CREPE MYRTLE
ELECTRIC JUNCTION BOX
FIRE HYDRANT
GUY ANCHOR
COMMUNICATIONS HANDHOLE
HISTORICAL MARKER
IRRIGATION CONTROL VALVE
FOUND IRON ROD / NAIL / "X" (SEE DESCRIPTION)
MAILBOX
POLE
POWER POLE
POWER POLE W/ CONDUIT
POWER POLE W/ LIGHT
POWER POLE W/ TRANSFORMER
PIPE RISER
SANITARY MANHOLE
TELEPHONE MANHOLE
SIGN (SEE DESCRIPTION)
SIGN DOUBLE POST
LIGHT POLE
STORM MANHOLE
TELEPHONE PEDESTAL
TRAFFIC CONTROL BOX
TRAFFIC SIGNAL POLE
TRAFFIC PULL BOX
TRAVERSE
TREE (SEE DESCRIPTION)
PALM
TELEVISION PEDESTAL
WATER MANHOLE
WATER METER
WATER VALVE
YARD LIGHT
CHAINLINK FENCE
CONCRETE / GUARDRAIL / BARRIER
OVERHEAD ELECTRIC
OVERHEAD TRAFFIC SIGNAL
WOOD FENCE
WROUGHT IRON FENCE
HIGH BANK
R.O.W. LINE
CONTOUR LINE
ZONE X SHADED
FLOODWAY ZONE AE
ZONE AE
ZONE AE

ABBREVIATIONS LEGEND:

C.C.A.D.	COMAL COUNTY APPRAISAL DISTRICT
CMP	CORRUGATED METAL PIPE
COMM	COMMUNICATION
CONC	CONCRETE
ELEC	ELECTRIC
FL	FLOWLINE
FND	FOUND
G / GUT	GUTTER
IR	IRON ROD
LND	LANDSCAPED
No.	NUMBER
(NFV)	NOT FIELD VERIFIED
OHE	OVERHEAD ELECTRIC
PLT	PLANTER
PVC	POLYVINYL CHLORIDE PIPE
(R)	PER RECORD DRAWING
RCP	REINFORCED CONCRETE PIPE
SAN	SANITARY SEWER
STM	STORM SEWER
S/W	SIDEWALK
TC	TOP OF CURB
(TYP)	TYPICAL
U/G	UNDERGROUND
WCS	WITH CAP STAMPED
W.I.	WROUGHT IRON
W/	WITH
WTR	WATERLINE
R.O.W.	RIGHT OF WAY

COMMON STREET ALIGNMENT CURVE TABLE						
CURVE No.	RADIUS	LENGTH	CHORD	BEGIN STA.	END STA.	DELTA
C1	770.11'	241.53'	N49° 54' 57.92"E, 240.54'	34+31.38	36+72.91	17°58'10"
C2	400.06'	91.47'	N47° 28' 52.78"E, 91.27'	45+69.13	46+60.60	13°06'00"
C3	625.09'	176.57'	N45° 56' 21.05"E, 175.98'	58+28.76	60+05.32	16°11'03"
C4	1178.16'	324.99'	N45° 44' 57.55"E, 323.96'	61+75.71	65+00.70	15°48'16"

I HEREBY CERTIFY THAT THIS PLAT CORRECTLY REPRESENTS A SURVEY MADE ON THE GROUND UNDER MY SUPERVISION ON JULY 5, 2022, AND THAT SAID SURVEY COMPLIES WITH THE CURRENT TEXAS SOCIETY OF PROFESSIONAL SURVEYORS STANDARDS FOR LAND SURVEYS FOR A CATEGORY 6, CONDITION II TOPOGRAPHIC SURVEY.

STATE OF TEXAS REGISTERED MARION R. CLARK 1881 PROFESSIONAL LAND SURVEYOR

MARION R. CLARK
REGISTERED PROFESSIONAL
LAND SURVEYOR
TEXAS REGISTRATION NO. 1881

REV	DESCRIPTION	DATE	APPR
1	ADD TOPO PER COMMENTS AND MARKUPS	08/08/2022	DB
2	SCALED TO SURFACE PER CLIENT REQUEST	08/07/2023	DB
3	EDITED FLOOD ZONE PER CLIENT REQUEST	08/30/2023	WS
4	FIX FLOODWAY PER CLIENT REQUEST	11/09/2023	MT

OVERALL CONTROL MAP

COMMON STREET PEDESTRIAN IMPROVEMENTS

CITY OF NEW BRAUNFELS
550 Landa Street | New Braunfels, TX 78130

DESIGN BY: XXX
DRAWN BY: SBS
CHECKED BY: GM
APPROVED BY: DPB

City of New Braunfels

ENGINEER:
THE GOODMAN CORPORATION
3200 TRAVIS, SUITE 200
HOUSTON, TEXAS 77006
www.TheGoodmanCorp.com
(713) 951-7951
TBPELS Firm Registration No. 19990

SURVEYOR: MBCO
ENGINEERING + SURVEYING
1505 Highway 6 South, Suite 180
Houston, Texas 77077
281.760.1656
MBCOEngineering.com
SBE/WBE/DBE/HUB
TBPELS Engineering Firm No. F-16850
Land Surveying Firm No. 10194810

DATE: 07/05/2022
SCALE: 1" = 100'

N:\500 - SURVEY DEPARTMENT\Goodman Corp_0150\5-0150-2201 - Common St\06.03_Drawings\SHEETS\5-0150-2201 New Braunfels (Sheets) surface_08312023.dwg, 12/1/2023

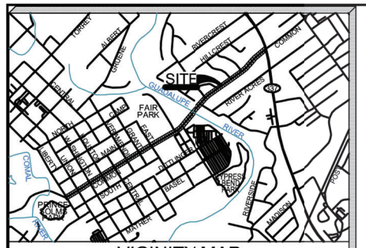

VICINITY MAP
(NOT TO SCALE)

GRAPHIC SCALE

20 0 10 20

1 inch = 20 ft.

NOTES:

THIS SURVEY REPRESENTS A TOPOGRAPHIC SURVEY OF SUBJECT PROPERTY AND IS NOT A BOUNDARY SURVEY. PROPERTY INFORMATION SHOWN FROM DEEDS, PLATS AND/OR GIS DATA FOR THE SURVEYED PREMISES AND WAS PERFORMED WITHOUT THE BENEFIT OF A TITLE COMMITMENT. EASEMENTS AND RESTRICTIONS MAY EXIST WHICH ARE NOT REFERENCED HEREON. NO ADDITIONAL RESEARCH REGARDING THE EXISTENCE OF EASEMENTS OR RESTRICTIONS OF RECORD HAS BEEN PERFORMED BY MBCC ENGINEERING LLC.

THIS TRACT LIES PARTIALLY IN ZONE "X" (UNSHADED), DESIGNATED AS "AREAS DETERMINED TO BE OUTSIDE THE 0.2% ANNUAL CHANCE FLOODPLAIN", IN ZONE "X" (SHADED), DESIGNATED AS "AREAS OF THE 0.2% ANNUAL CHANCE FLOOD; AREAS OF THE 1% ANNUAL CHANCE FLOOD WITH AVERAGE DEPTHS LESS THAN 1 FOOT OR WITH DRAINAGE AREAS LESS THAN 1 SQUARE MILE; AND AREAS PROTECTED BY LEVEES FORM 1% ANNUAL CHANCE FLOOD", AND THIS TRACT LIES PARTIALLY IN ZONE "AE", DEFINED AS "SPECIAL FLOOD HAZARD AREAS SUBJEC" TO INUNDATION BY THE 0.1% ANNUAL CHANCE FLOOD EVENT, WHERE THE BASE FLOOD ELEVATIONS ARE DETERMINED", AS PER THE NATICNAL FLOOD INSURANCE PROGRAM FIRM COMMUNITY PANEL NUMBER 48091C0455F, LATEST AVAILABLE PUBLISHED REVISION DATED SEPTEMBER 2, 2009. THE BASE FLOOD ELEVATION(S) AS PUBLISHED ARE 618', 620' AND 621".

A ZONING REPORT WAS NOT PROVIDED AT THE TIME OF THIS SURVEY; HOWEVER, THIS TRACT IS SUBJECT TO THE DEVELOPMENTAL REQUIREMENTS OF THE CITY OF NEW BRAUNFELS, TEXAS AND COMAL COUNTY.

THERE ARE NO NATURAL DRAINAGE COURSES ON THE SUBJECT TRACT.

MINERAL RIGHTS AND/OR LEASE RIGHTS ARE NOT SURVEY RELATED AND THEREFORE NOT A PART OF THIS SURVEY.

SURFACE OR SUBSURFACE FAULTING, HAZARDOUS WASTE OR OTHER ENVIRONMENTAL ISSUES HAVE NOT BEEN ADDRESSED WITHIN THE SCOPE OF THIS SURVEY.

FENCE LINES, TREE DRIP LINES AND/OR LIMITS OF VEGETATION/WOODED AREAS SHOWN HEREON ARE GRAPHIC, WITH DIMENSIONED TIES SHOWN AT SPECIFIC LOCATIONS WHERE THEY WERE PHYSICALLY MEASURED; SAID LINES MAY MEANDER BETWEEN SAID LOCATIONS.

UNDERGROUND UTILITIES AS SHOWN HEREON ARE DERIVED FROM FIELD SURVEYS, RECORD DRAWINGS, AND/OR TONE MARKS PROVIDED BY 811. CONTRACTOR TO VERIFY ACTUAL LOCATION AND EXISTENCE OF UNDERGROUND UTILITIES PRIOR TO CONSTRUCTION.

THE ACTUAL LOCATION OF ANY PIPELINES WITHIN THE EASEMENT, THE SIZE OF THE PIPE AND PRODUCT CARRIED MAY DETERMINE IF A SETBACK BEYOND THE EDGE OF THE EASEMENT IS REQUIRED BY THE OPERATOR.

ELEVATIONS DETAIL SHOWN ON THE SURVEYED PREMISES CAN BE VIEWED IN GREATER DETAIL ON THE TOPOGRAPHIC BASE DRAWING AND/OR THE PROJECT POINT FILE ATTACHED TO THE DELIVERABLE PACKAGE. TO VIEW ALL SURVEY POINTS AND DESCRIPTIONS SET THE _ALL POINTS GROUP TO THE TOP OF THE POINT GROUP HIERARCHY UNDER POINT GROUP PROPERTIES IN THE TOOLSPACE DIALOG OF THE PROSPECTOR TAB.

BURIED UTILITIES HAVE BEEN ROUTED BY CONNECTING VISIBLE SURFACE APPURTENANCES IN COMBINATION WITH RECORD DRAWING LOCATIONS. THERE MAY EXIST ADDITIONAL BURIED UTILITIES WHICH HAVE NOT BEEN FIELD VERIFIED AND/OR REFERENCED HEREON. THE CONTRACTOR SHOULD VERIFY THE HORIZONTAL AND VERTICAL LOCATIONS OF ALL UTILITIES BEFORE COMMENCING CONSTRUCTION.

SITE BENCHMARK:

VERTICAL DATUM: NAVD 88 GEOID 18, BY GPS OBSERVATION
HORIZONTAL DATUM: TEXAS STATE PLANE COORDINATE SYSTEM NAD83
TEXAS SOUTH CENTRAL ZONE (4204) NAD 33
NO PUBLISHED MARK WAS REFERENCED

COMBINED SCALE FACTOR NOTE:

COORDINATE REFERENCED HEREON ARE SURFACE VALUES AND MAY BE CONVERTED TO GRID VALUES BY DIVIDING THE FOLLOWING COMBINED SCALE FACTOR OF 1.00014.

TEMPORARY BENCHMARKS (TBM'S):

TBM "1":
CONTROL POINT #1 - COTTON SPINDLE LOCATED ON THE NORTH SIDE OF COMMON STREET APPROXIMATELY 190' SOUTHWEST OF COMMON STREET AND LOOP 337/SH 46 INTERSECTION.
ELEVATION = 670.45'

TBM "4":
CONTROL POINT #4 - 5/8" IRON ROD WCS "MBCO" LOCATED ON THE SOUTH SIDE OF COMMON STREET APPROXIMATELY 75' SOUTH OF COMMON STREET AND PEACE AVENUE INTERSECTION.
ELEVATION = 636.22'

TBM "7":
CONTROL POINT #7 - 5/8" IRON ROD WCS "MBCO" LOCATED ON THE SOUTH SIDE OF HINMAN ISLAND DRIVE APPROXIMATELY 89' SOUTHWEST OF HINMAN ISLAND DRIVE, WEST COMMON STREET AND NORTH LIBERTY AVENUE INTERSECTION.
ELEVATION = 636.03'

CONTROL POINT 1

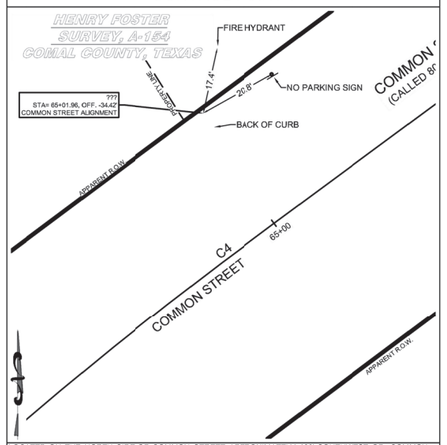

LOCATED ON THE NORTH SIDE OF COMMON STREET APPROXIMATELY 190' SOUTHWEST OF COMMON STREET AND LOOP 337/SH 46 INTERSECTION.

CONTROL POINT 2

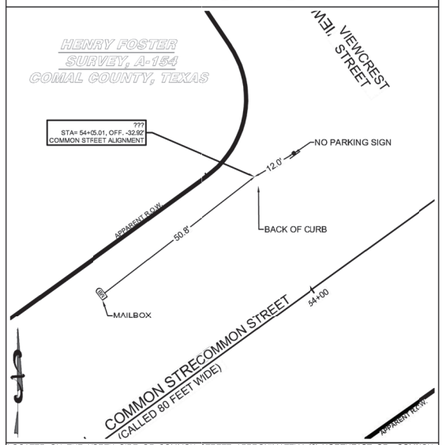

LOCATED ON THE NORTH SIDE OF COMMON STREET APPROXIMATELY 53' NORTHEAST OF COMMON STREET AND VIEWCREST STREET INTERSECTION.

CONTROL POINT 3

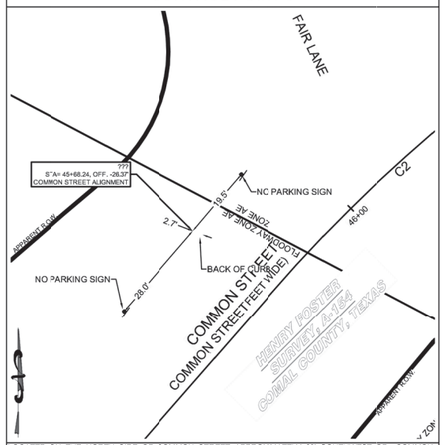

LOCATED ON THE NORTH SIDE OF COMMON STREET APPROXIMATELY 69' SOUTHWEST OF COMMON STREET AND FAIR LANE INTERSECTION.

CONTROL POINT 4

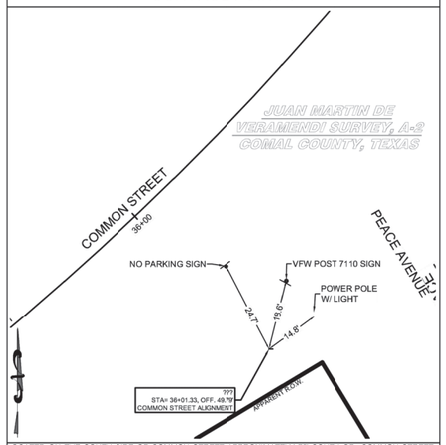

LOCATED ON THE SOUTH SIDE OF COMMON STREET APPROXIMATELY 75' SOUTH OF COMMON STREET AND PEACE AVENUE INTERSECTION.

CONTROL POINT 5

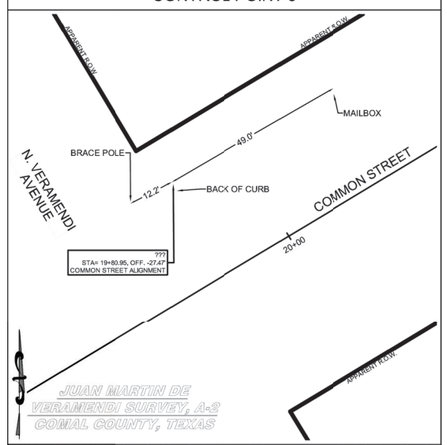

LOCATED ON THE NORTH SIDE OF COMMON STREET APPROXIMATELY 53' NORTHEAST OF COMMON STREET AND NORTH/SOUTH VERAMENDI AVENUE INTERSECTION.

CONTROL POINT 6

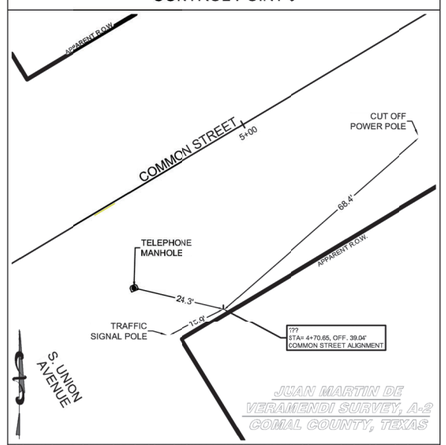

LOCATED ON THE SOUTH SIDE OF COMMON STREET APPROXIMATELY 60' SOUTHEAST OF COMMON STREET AND SOUTH UNION AVENUE INTERSECTION

CONTROL POINT 7

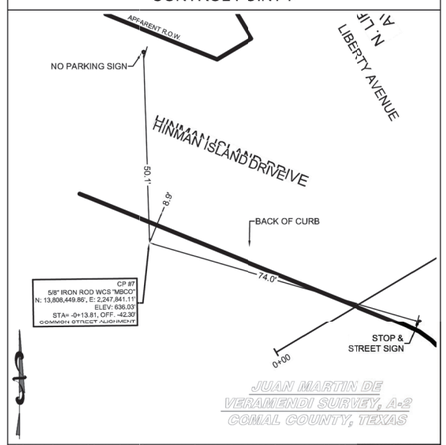

LOCATED ON THE SOUTH SIDE OF HINMAN ISLAND DRIVE APPROXIMATELY 89' SOUTHWEST OF HINMAN ISLAND DRIVE, WEST COMMON STREET AND NORTH LIBERTY AVENUE INTERSECTION.

SYMBOL LEGEND:

BACK FLOW PREVENTER
"BB" INLET
BENCHMARK
BOLLARD / POST
BRACE POLE
BUSINESS SIGN (SEE DESCRIPTION)
BURIED CABLE MARKER
CLEAN OUT
CREPE MYRTLE
ELECTRIC JUNCTION BOX
FIRE HYDRANT
GUY ANCHOR
COMMUNICATIONS HANDHOLE
HISTORICAL MARKER
IRRIGATION CONTROL VALVE
FOUND IRON ROD / NAIL / "X" (SEE DESCRIPTION)
MAILBOX
POLE
POWER POLE
POWER POLE W/ CONDUIT
POWER POLE W/ LIGHT
POWER POLE W/ TRANSIFORMER
PIPE RISER
SANITARY MANHOLE
TELEPHONE MANHOLE
SIGN (SEE DESCRIPTION)
SIGN DOUBLE POST
LIGHT POLE
STORM MANHOLE
TELEPHONE PEDESTAL
TRAFFIC CONTROL BOX
TRAFFIC SIGNAL POLE
TRAFFIC PULL BOX
TRAVERSE
TREE (SEE DESCRIPTION)
PALM
TELEVISION PEDESTAL
WATER MANHOLE
WATER METER
WATER VALVE
YARD LIGHT
CHAINLINK FENCE
CONCRETE / GUARDRAIL / BARRIER
OVERHEAD ELECTRIC
OVERHEAD TRAFFIC SIGNAL
WOOD FENCE
WROUGHT IRON FENCE
HIGH BANK

ABBREVIATIONS LEGEND:

C.C.A.D.	COMAL COUNTY APPRAISAL DISTRICT
CMP	CORRUGATED METAL PIPE
COMM	COMMUNICATION
CONC	CONCRETE
ELEC	ELECTRIC
FL	FLOWLINE
FND	FOUND
G / GUT	GUTTER
IR	IRON ROD
LND	LANDSCAPED
No.	NUMBER
(NFV)	NOT FIELD VERIFIED
OHE	OVERHEAD ELECTRIC
PLT	PLANTER
PVC	POLYVINYL CHLORIDE PIPE
(R)	PER RECORD DRAWING
RCP	REINFORCED CONCRETE PIPE
SAN	SANITARY SEWER
STM	STORM SEWER
S/W	SIDEWALK
TC	TOP OF CURB
(TYP)	TYPICAL
U/G	UNDERGROUND
WCS	WITH CAP STAMPED
W.I.	WROUGHT IRON
W/	WITH
WTR	WATERLINE

STATE OF TEXAS REGISTERED MARION R. CLARK 1881 PROFESSIONAL LAND SURVEYOR

I HEREBY CERTIFY THAT THIS PLAT CORRECTLY REPRESENTS A SURVEY MADE ON THE GROUND UNDER MY SUPERVISION ON JULY 5, 2022, AND THAT SAID SURVEY COMPLIES WITH THE CURRENT TEXAS SOCIETY OF PROFESSIONAL SURVEYORS STANDARDS FOR LAND SURVEYS FOR A CATEGORY 6, CONDITION II TOPOGRAPHIC SURVEY.

MARION R. CLARK
REGISTERED PROFESSIONAL
LAND SURVEYOR
TEXAS REGISTRATION NO. 1881

REV	DESCRIPTION	DATE	APPR
1	ADD TOPO PER COMMENTS AND MARKUPS	08/08/2022	DB
2	SCALED TO SURFACE PER CLIENT REQUEST	08/07/2023	DB
3	EDITED FLOOD ZONE PER CLIENT REQUEST	08/30/2023	WS

CONTROL DETAIL 1-7

COMMON STREET PEDESTRIAN IMPROVEMENTS

CITY OF NEW BRAUNFELS
550 Landa Street | New Braunfels, TX 78130

DESIGN BY: XXX
DRAWN BY: SBS
CHECKED BY: GM
APPROVED BY: DPB

City of New Braunfels

ENGINEER:
THE GOODMAN CORPORATION
3200 TRAVIS, SUITE 200
HOUSTON, TEXAS 77006
www.TheGoodmanCorp.com
(713) 951-7951
TBPELS Firm Registration No. 19990

SURVEYOR:
MBCO ENGINEERING + SURVEYING
1705 Highway 6 South, Suite 180
Houston, Texas 77077
281.760.1656
MBCOengineering.com
SBE/MBE/DBE/HUB
TBPLS Engineering Firm No. F-16850
Land Surveying Firm No. 10194810

DATE: 07/05/2022
SCALE: 1" = 20'

N:\500_ SURVEY DEPARTMENT\Goodman Corp_0150\5-0150-2201 - Common St\06.03_Drawings\SHEETS\5-0150-2201 New Braunfels (Sheets) surface_08312023.dwg, 12/1/2022

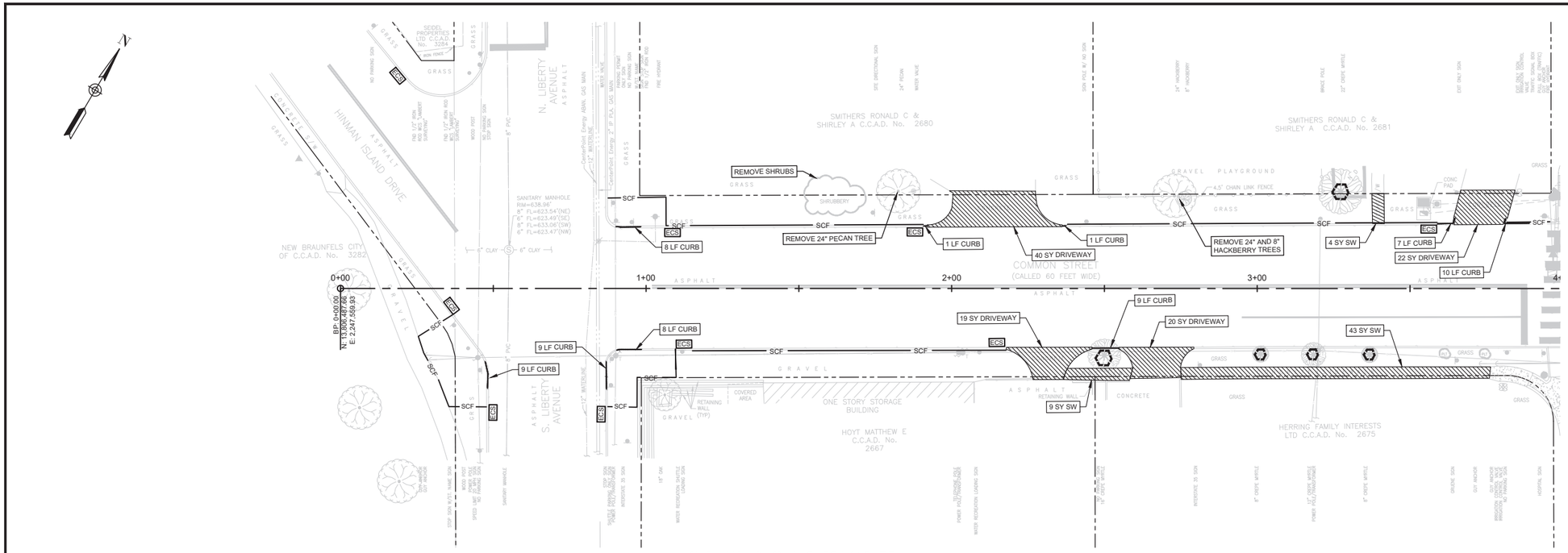

SIDEWALK - STA. 0+00 TO 3+75

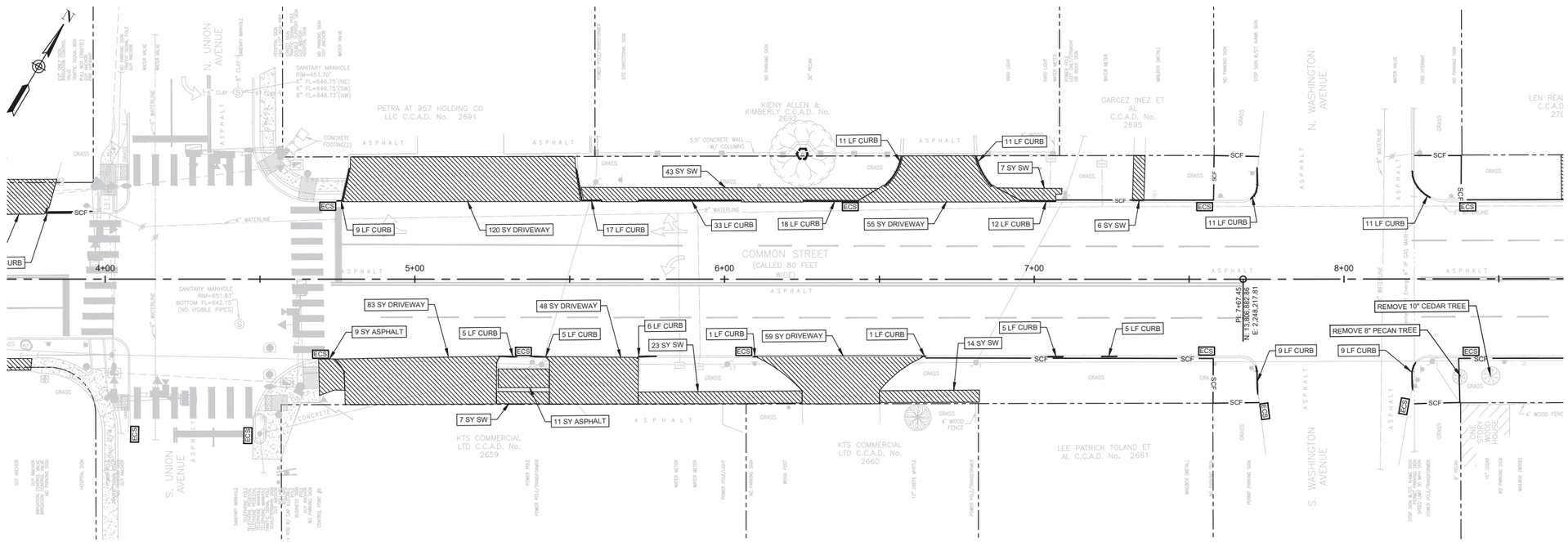

SIDEWALK - STA. 3+75 TO 8+50

REMOVAL LEGEND

- REMOVE CONCRETE CURB
- REMOVE CONCRETE SIDEWALK/ ASPHALT & CONCRETE DRIVEWAY
- XX — REMOVAL QUANTITY
- SCF — INSTALL SEDIMENT CONTROL FENCE
- CL-CI / CL-ROW — INSTALL EROSION CONTROL LOG AT CURB INLET OR RIGHT-OF-WAY
- ECS — INSTALL EROSION CONTROL SANDBAG
- INSTALL TREE PROTECTION FENCING

SYMBOL LEGEND:

- BACK FLOW PREVENTER
- "BB" INLET
- BENCHMARK
- BOLLARD / POST
- BRACE POLE
- BUSINESS SIGN (SEE DESCRIPTION)
- BURIED CABLE MARKER
- CLEAN OUT
- CREPE MYRTLE
- ELECTRIC JUNCTION BOX
- FIRE HYDRANT
- GUY ANCHOR
- COMMUNICATIONS HANDHOLE
- HISTORICAL MARKER
- IRRIGATION CONTROL VALVE
- FOUND IRON ROD / NAIL / "X" (SEE DESCRIPTION)
- MAILBOX
- POLE
- POWER POLE
- POWER POLE W/ CONDUIT
- POWER POLE W/ LIGHT
- POWER POLE W/ TRANSFORMER
- PIPE RISER
- SANITARY MANHOLE
- TELEPHONE MANHOLE
- SIGN (SEE DESCRIPTION)
- SIGN DOUBLE POST
- LIGHT POLE
- STORM MANHOLE
- TELEPHONE PEDESTAL
- TRAFFIC CONTROL BOX
- TRAFFIC SIGNAL POLE
- TRAFFIC PULL BOX
- TRAVERSE
- TREE (SEE DESCRIPTION)
- PALM
- TELEVISION PEDESTAL
- WATER MANHOLE
- WATER METER
- WATER VALVE
- YARD LIGHT
- CURB RAMP
- PAVERS
- RIGHT-OF-WAY
- CHAINLINK FENCE
- CONCRETE / GUARDRAIL / BARRIER
- OVERHEAD ELECTRIC
- OVERHEAD TRAFFIC SIGNAL
- WOOD FENCE
- WROUGHT IRON FENCE

ABBREVIATIONS LEGEND:

C.C.A.D.	COMAL COUNTY APPRAISAL DISTRICT
CMP	CORRUGATED METAL PIPE
COMM	COMMUNICATION
CONC	CONCRETE
ELEC	ELECTRIC
FL	FLOWLINE
FND	FOUND
G / GUT	GUTTER
IR	IRON ROD
LND	LANDSCAPED
No.	NUMBER
(NFV)	NOT FIELD VERIFIED
OHE	OVERHEAD ELECTRIC
PLT	PLANTER
PVC	POLYVINYL CHLORIDE PIPE
(R)	PER RECORD DRAWING
RCP	REINFORCED CONCRETE PIPE
SAN	SANITARY SEWER
STM	STORM SEWER
S/W	SIDEWALK
TC	TOP OF CURB
(TYP)	TYPICAL
U/G	UNDERGROUND
WCS	WITH CAP STAMPED
W.I.	WROUGHT IRON
W/	WITH
WTR	WATERLINE

NOTES:

1. CONTRACTOR SHALL PROTECT EXISTING UTILITIES.
2. ALL LEGEND ITEMS ARE NOT APPLICABLE TO ALL SHEETS.
3. THE CONTRACTOR SHALL PROTECT ALL TREES IF NOT SPECIFICALLY MARKED FOR REMOVAL OR PRUNING. INSTALL TREE PROTECTION FENCE AROUND THE TREES TO BE PROTECTED, AND MAINTAIN DURING THE CONSTRUCTION WORK.
4. CONTRACTOR SHALL NOT REMOVE OR ALTER ANY ITEM WITHIN THE PRIVATE PROPERTY UNLESS SPECIFICALLY NOTED ON THE PLAN.
5. NO WORK THAT COULD HAVE AN IMPACT TO THE EXISTING FEMA 100YR WSEL IS BEING PROPOSED FOR THIS PROJECT.
6. FPA NOTIFICATION FOR COMAL COUNTY/CITY WAS SUBMITTED IN WRITING ON 11/29/23.

0 20 40 Feet

REV	DATE	DESCRIPTION	APPR
0	02/12/24	ISSUED FOR BID	AG

DEMOLITION & SWPPP PLAN 1

COMMON STREET PEDESTRIAN IMPROVEMENTS

CITY OF NEW BRAUNFELS
550 Landa Street | New Braunfels, TX 78130

DESIGN BY: KM
DRAWN BY: EFC
CHECKED BY: JB
APPROVED BY: AG

City of New Braunfels

ENGINEER:
THE GOODMAN CORPORATION
3200 TRAVIS, SUITE 200
HOUSTON, TEXAS 77006
www.TheGoodmanCorp.com
(713) 951-7951
TBPELS Firm Registration No. 19990

SURVEYOR:
MBCO ENGINEERING + SURVEYING

STATE OF TEXAS
ASHISH GHOSH
111103
LICENSED
PROFESSIONAL ENGINEER
2/13/2024

DATE: 02/12/2024
SCALE: AS NOTED

SHEET NUMBER
30 OF 97

W:\00_TGC Project Files\NBR100\CAD\NBR100_REMOVAL.dwg, 2/12/2024

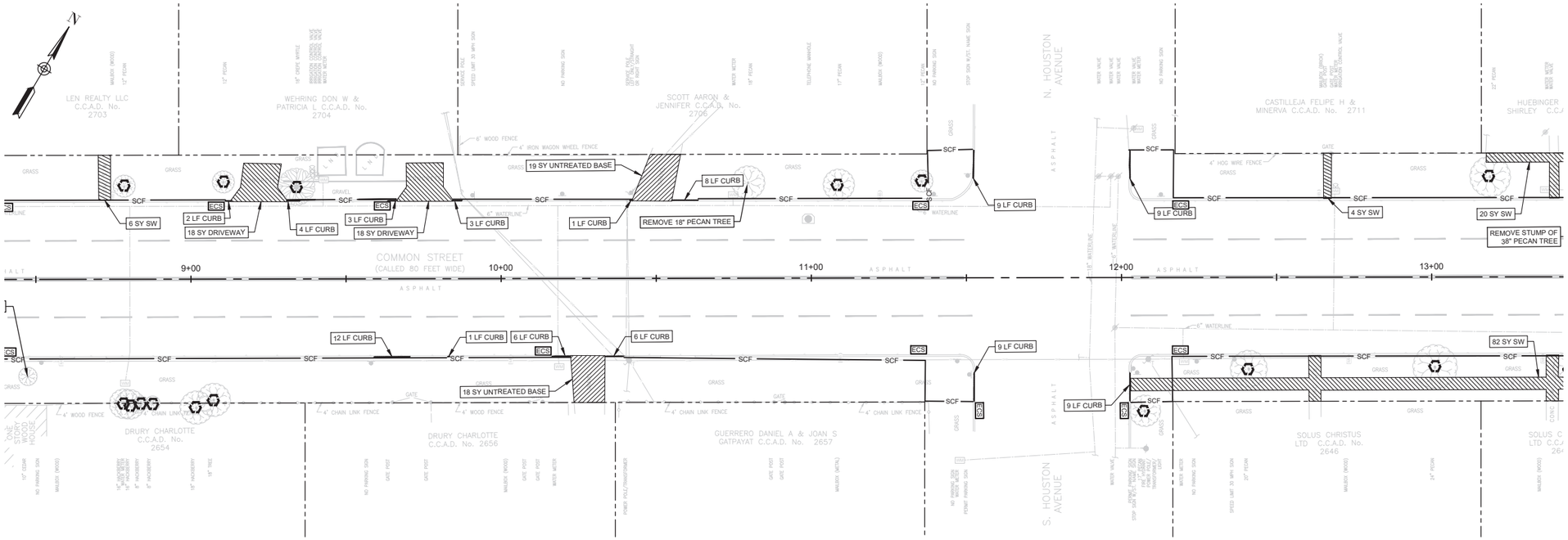

SIDEWALK - STA. 8+50 TO 13+25

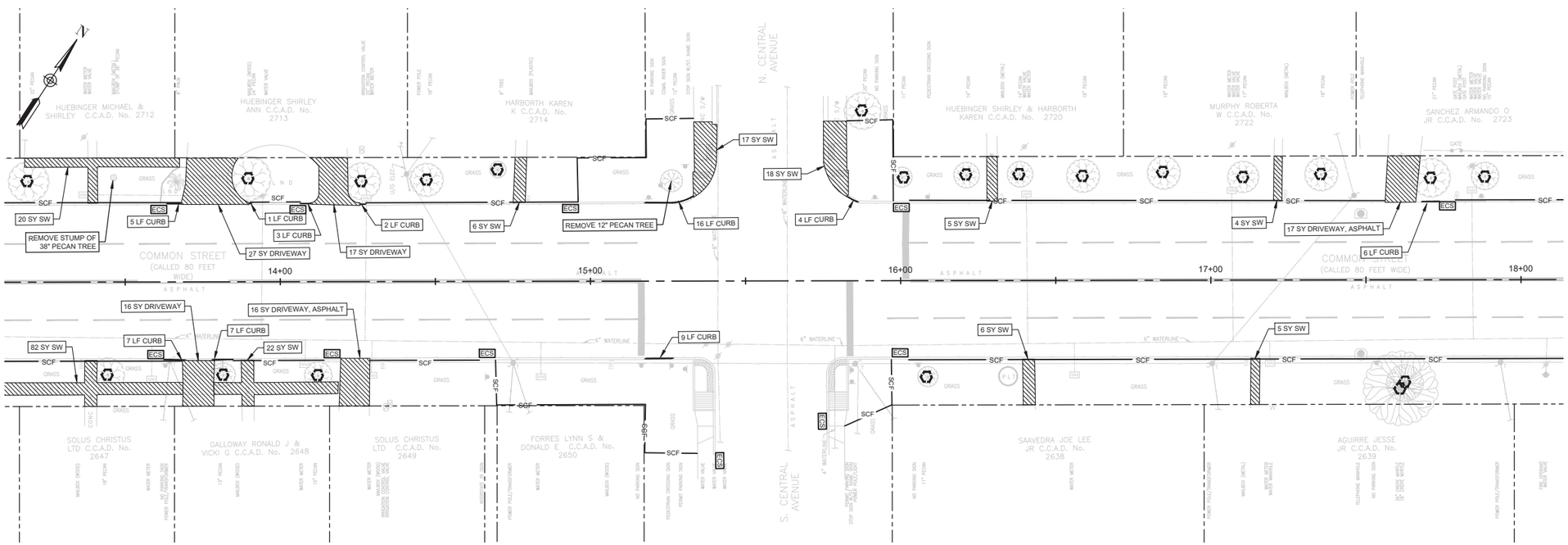

SIDEWALK - STA. 13+25 TO 18+00

NOTES:

1. CONTRACTOR SHALL PROTECT EXISTING UTILITIES.
2. ALL LEGEND ITEMS ARE NOT APPLICABLE TO ALL SHEETS.
3. THE CONTRACTOR SHALL PROTECT ALL TREES IF NOT SPECIFICALLY MARKED FOR REMOVAL OR PRUNING. INSTALL TREE PROTECTION FENCE AROUND THE TREES TO BE PROTECTED, AND MAINTAIN DURING THE CONSTRUCTION WORK.
4. CONTRACTOR SHALL NOT REMOVE OR ALTER ANY ITEM WITHIN THE PRIVATE PROPERTY UNLESS SPECIFICALLY NOTED ON THE PLAN.
5. NO WORK THAT COULD HAVE AN IMPACT TO THE EXISTING FEMA 100YR WSEL IS BEING PROPOSED FOR THIS PROJECT.
6. FPA NOTIFICATION FOR COMAL COUNTY/CITY WAS SUBMITTED IN WRITING ON 11/29/23.

REMOVAL LEGEND

- REMOVE CONCRETE CURB
- REMOVE CONCRETE SIDEWALK/ ASPHALT & CONCRETE DRIVEWAY
- XX — REMOVAL QUANTITY
- SCF — INSTALL SEDIMENT CONTROL FENCE
- CL-CI / CL-ROW — INSTALL EROSION CONTROL LOG AT CURB INLET OR RIGHT-OF-WAY
- ECS — INSTALL EROSION CONTROL SANDBAG
- INSTALL TREE PROTECTION FENCING

SYMBOL LEGEND:

- BACK FLOW PREVENTER
- "BB" INLET
- BENCHMARK
- BOLLARD / POST
- BRACE POLE
- BUSINESS SIGN (SEE DESCRIPTION)
- BURIED CABLE MARKER
- CLEAN OUT
- CREPE MYRTLE
- ELECTRIC JUNCTION BOX
- FIRE HYDRANT
- GUY ANCHOR
- COMMUNICATIONS HANDHOLE
- HISTORICAL MARKER
- IRRIGATION CONTROL VALVE
- FOUND IRON ROD / NAIL / "X" (SEE DESCRIPTION)
- MB — MAILBOX
- POLE
- POWER POLE
- POWER POLE W/ CONDUIT
- POWER POLE W/ LIGHT
- POWER POLE W/ TRANSFORMER
- PIPE RISER
- S — SANITARY MANHOLE
- TELEPHONE MANHOLE
- SIGN (SEE DESCRIPTION)
- SIGN DOUBLE POST
- LIGHT POLE
- D — STORM MANHOLE
- T — TELEPHONE PEDESTAL
- TB — TRAFFIC CONTROL BOX
- TRAFFIC SIGNAL POLE
- TRAFFIC PULL BOX
- TRAVERSE
- TREE (SEE DESCRIPTION)
- PALM
- TV — TELEVISION PEDESTAL
- W — WATER MANHOLE
- WM — WATER METER
- WV — WATER VALVE
- YARD LIGHT
- CURB RAMP
- PAVERS
- RIGHT-OF-WAY
- CHAINLINK FENCE
- CONCRETE / GUARDRAIL / BARRIER
- OVERHEAD ELECTRIC
- OVERHEAD TRAFFIC SIGNAL
- WOOD FENCE
- WROUGHT IRON FENCE

ABBREVIATIONS LEGEND:

C.C.A.D.	COMAL COUNTY APPRAISAL DISTRICT
CMP	CORRUGATED METAL PIPE
COMM	COMMUNICATION
CONC	CONCRETE
ELEC	ELECTRIC
FL	FLOWLINE
FND	FOUND
G / GUT	GUTTER
IR	IRON ROD
LND	LANDSCAPED
No.	NUMBER
(NFV)	NOT FIELD VERIFIED
OHE	OVERHEAD ELECTRIC
PLT	PLANTER
PVC	POLYVINYL CHLORIDE PIPE
(R)	PER RECORD DRAWING
RCP	REINFORCED CONCRETE PIPE
SAN	SANITARY SEWER
STM	STORM SEWER
S/W	SIDEWALK
TC	TOP OF CURB
(TYP)	TYPICAL
U/G	UNDERGROUND
WCS	WITH CAP STAMPED
W.I.	WROUGHT IRON
W/	WITH
WTR	WATERLINE

0 20 40 Feet

REV	DESCRIPTION	DATE	APPR
0	ISSUED FOR BID	02/12/24	AG

DEMOLITION & SWPPP PLAN 2

COMMON STREET PEDESTRIAN IMPROVEMENTS

CITY OF NEW BRAUNFELS
550 Landa Street | New Braunfels, TX 78130

DESIGN BY: KM
DRAWN BY: EFC
CHECKED BY: JB
APPROVED BY: AG

City of New Braunfels

ENGINEER:
THE GOODMAN CORPORATION
3200 TRAVIS, SUITE 200
HOUSTON, TEXAS 77006
www.TheGoodmanCorp.com
(713) 951-7951
TBPELS Firm Registration No. 19990

SURVEYOR:
MBCO ENGINEERING + SURVEYING

STATE OF TEXAS
ASHISH GHOSH
111103
LICENSED
PROFESSIONAL ENGINEER
2/13/2024

DATE: 02/12/2024
SCALE: AS NOTED

SHEET NUMBER
31 OF 97

W:\00_TGC Project Files\MBR100\CAD\MBR100_REMOVAL.dwg, 2/12/2024

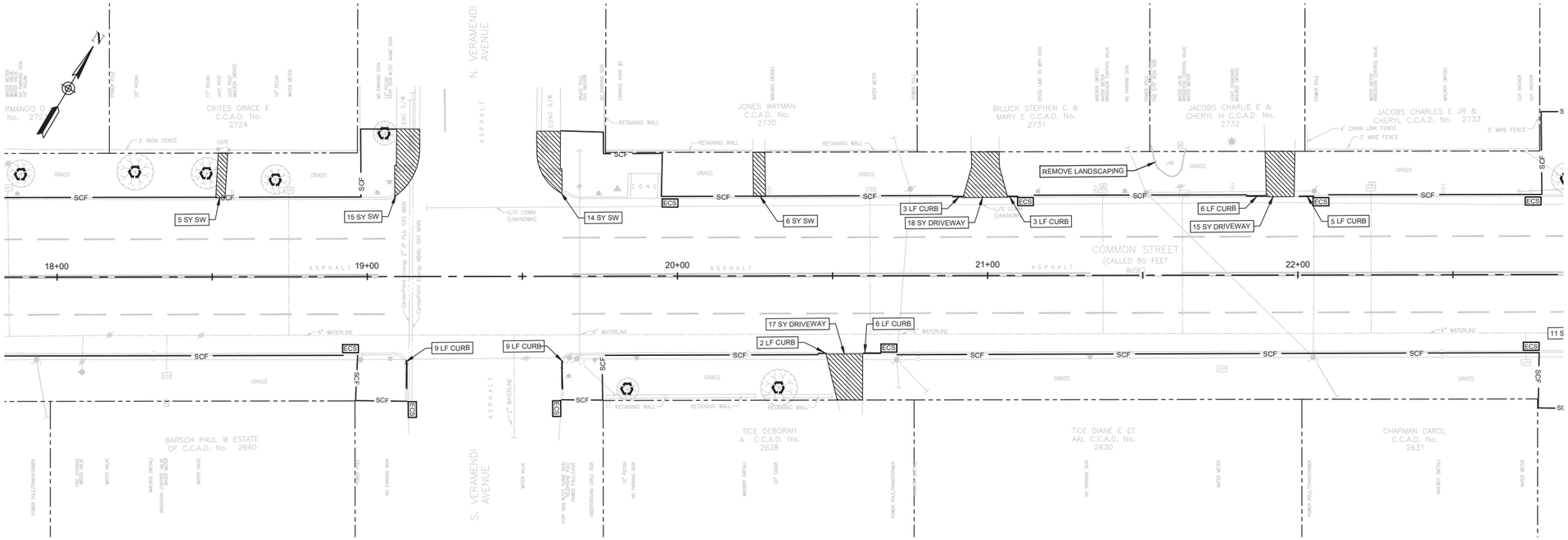

SIDEWALK - STA. 18+00 TO 22+70

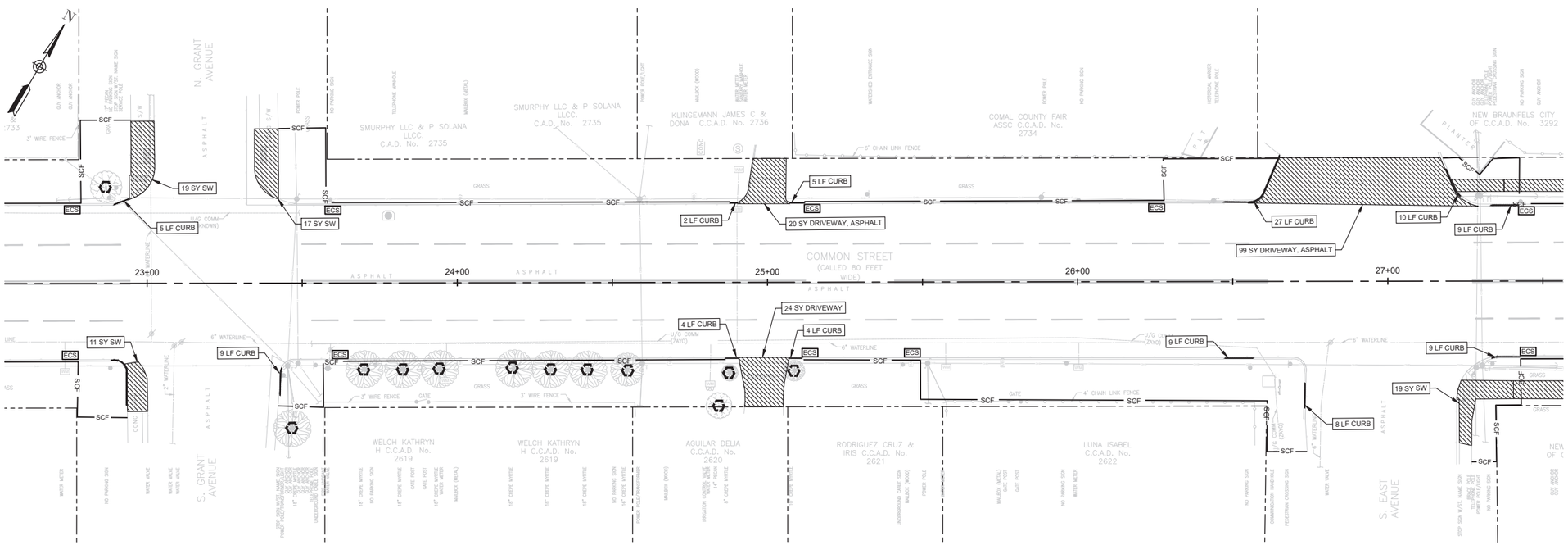

SIDEWALK - STA. 22+70 TO 27+40

REMOVAL LEGEND

- REMOVE CONCRETE CURB
- REMOVE CONCRETE SIDEWALK/ ASPHALT & CONCRETE DRIVEWAY
- XX — REMOVAL QUANTITY
- SCF — INSTALL SEDIMENT CONTROL FENCE
- CL-CI / CL-ROW — INSTALL EROSION CONTROL LOG AT CURB INLET OR RIGHT-OF-WAY
- ECS — INSTALL EROSION CONTROL SANDBAG
- INSTALL TREE PROTECTION FENCING

SYMBOL LEGEND:

- BACK FLOW PREVENTER
- "BB" INLET
- BENCHMARK
- BOLLARD / POST
- BRACE POLE
- BUSINESS SIGN (SEE DESCRIPTION)
- BURIED CABLE MARKER
- CLEAN OUT
- CREPE MYRTLE
- ELECTRIC JUNCTION BOX
- FIRE HYDRANT
- GUY ANCHOR
- COMMUNICATIONS HANDHOLE
- HISTORICAL MARKER
- IRRIGATION CONTROL VALVE
- FOUND IRON ROD / NAIL / "X" (SEE DESCRIPTION)
- MAILBOX
- POLE
- POWER POLE
- POWER POLE W/ CONDUIT
- POWER POLE W/ LIGHT
- POWER POLE W/ TRANSFORMER
- PIPE RISER
- SANITARY MANHOLE
- TELEPHONE MANHOLE
- SIGN (SEE DESCRIPTION)
- SIGN DOUBLE POST
- LIGHT POLE
- STORM MANHOLE
- TELEPHONE PEDESTAL
- TRAFFIC CONTROL BOX
- TRAFFIC SIGNAL POLE
- TRAFFIC PULL BOX
- TRAVERSE
- TREE (SEE DESCRIPTION)
- PALM
- TELEVISION PEDESTAL
- WATER MANHOLE
- WATER METER
- WATER VALVE
- YARD LIGHT
- CURB RAMP
- PAVERS
- RIGHT-OF-WAY
- CHAINLINK FENCE
- CONCRETE / GUARDRAIL / BARRIER
- OVERHEAD ELECTRIC
- OVERHEAD TRAFFIC SIGNAL
- WOOD FENCE
- WROUGHT IRON FENCE

ABBREVIATIONS LEGEND:

C.C.A.D.	COMAL COUNTY APPRAISAL DISTRICT
CMP	CORRUGATED METAL PIPE
COMM	COMMUNICATION
CONC	CONCRETE
ELEC	ELECTRIC
FL	FLOWLINE
FND	FOUND
G / GUT	GUTTER
IR	IRON ROD
LND	LANDSCAPED
No.	NUMBER
(NFV)	NOT FIELD VERIFIED
OHE	OVERHEAD ELECTRIC
PLT	PLANTER
PVC	POLYVINYL CHLORIDE PIPE
(R)	PER RECORD DRAWING
RCP	REINFORCED CONCRETE PIPE
SAN	SANITARY SEWER
STM	STORM SEWER
S/W	SIDEWALK
TC	TOP OF CURB
(TYP)	TYPICAL
U/G	UNDERGROUND
WCS	WITH CAP STAMPED
W.I.	WROUGHT IRON
W/	WITH
WTR	WATERLINE

NOTES:

1. CONTRACTOR SHALL PROTECT EXISTING UTILITIES.
2. ALL LEGEND ITEMS ARE NOT APPLICABLE TO ALL SHEETS.
3. THE CONTRACTOR SHALL PROTECT ALL TREES IF NOT SPECIFICALLY MARKED FOR REMOVAL OR PRUNING. INSTALL TREE PROTECTION FENCE AROUND THE TREES TO BE PROTECTED, AND MAINTAIN DURING THE CONSTRUCTION WORK.
4. CONTRACTOR SHALL NOT REMOVE OR ALTER ANY ITEM WITHIN THE PRIVATE PROPERTY UNLESS SPECIFICALLY NOTED ON THE PLAN.
5. NO WORK THAT COULD HAVE AN IMPACT TO THE EXISTING FEMA 100YR WSEL IS BEING PROPOSED FOR THIS PROJECT.
6. FPA NOTIFICATION FOR COMAL COUNTY/CITY WAS SUBMITTED IN WRITING ON 11/29/23.

0 20 40 Feet

REV	DESCRIPTION	DATE	APPR
0	ISSUED FOR BID	02/12/24	AG

DEMOLITION & SWPPP PLAN 3

COMMON STREET PEDESTRIAN IMPROVEMENTS

CITY OF NEW BRAUNFELS
550 Landa Street | New Braunfels, TX 78130

DESIGN BY: KM
DRAWN BY: EFC
CHECKED BY: JB
APPROVED BY: AG

City of New Braunfels

ENGINEER:
THE GOODMAN CORPORATION
3200 TRAVIS, SUITE 200
HOUSTON, TEXAS 77006
www.TheGoodmanCorp.com
(713) 951-7951
TBPELS Firm Registration No. 19990

SURVEYOR:
MBCO ENGINEERING + SURVEYING

STATE OF TEXAS
ASHISH GHOSH
111103
LICENSED PROFESSIONAL ENGINEER
2/13/2024

DATE: 02/12/2024
SCALE: AS NOTED

W:\00_TGC Project Files\BR100\CAD\BR100_REMOVAL.dwg, 2/12/2024

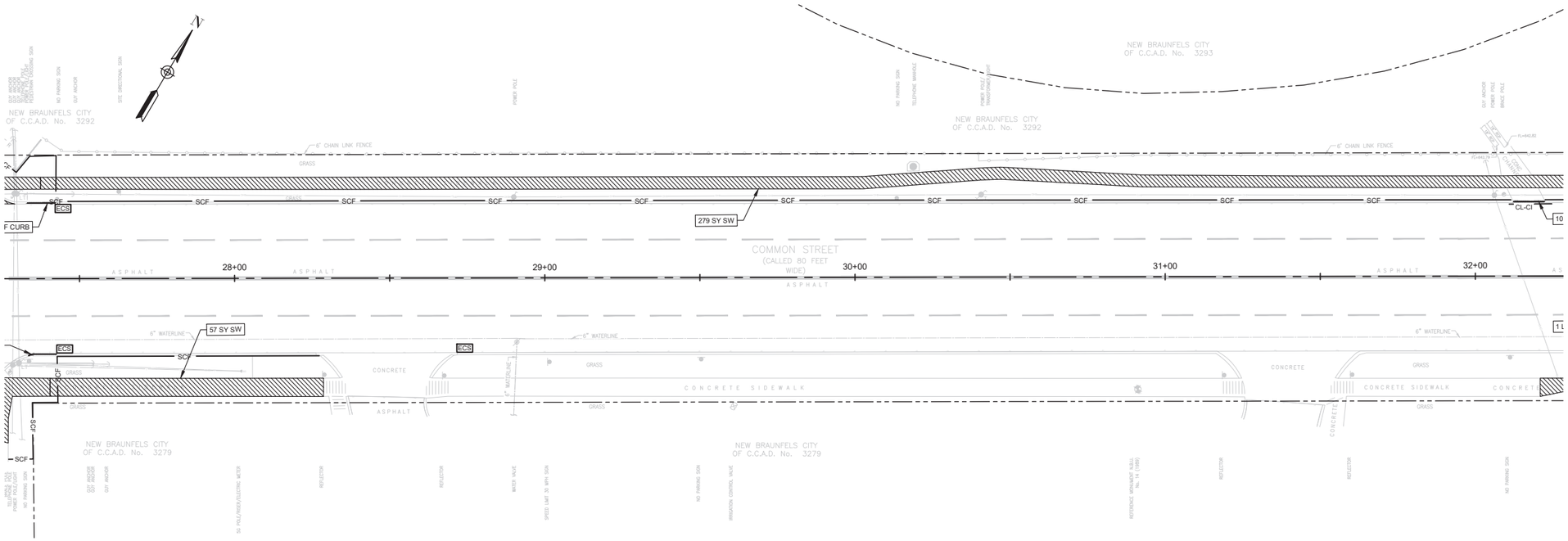

SIDEWALK - STA. 27+40 TO 32+10

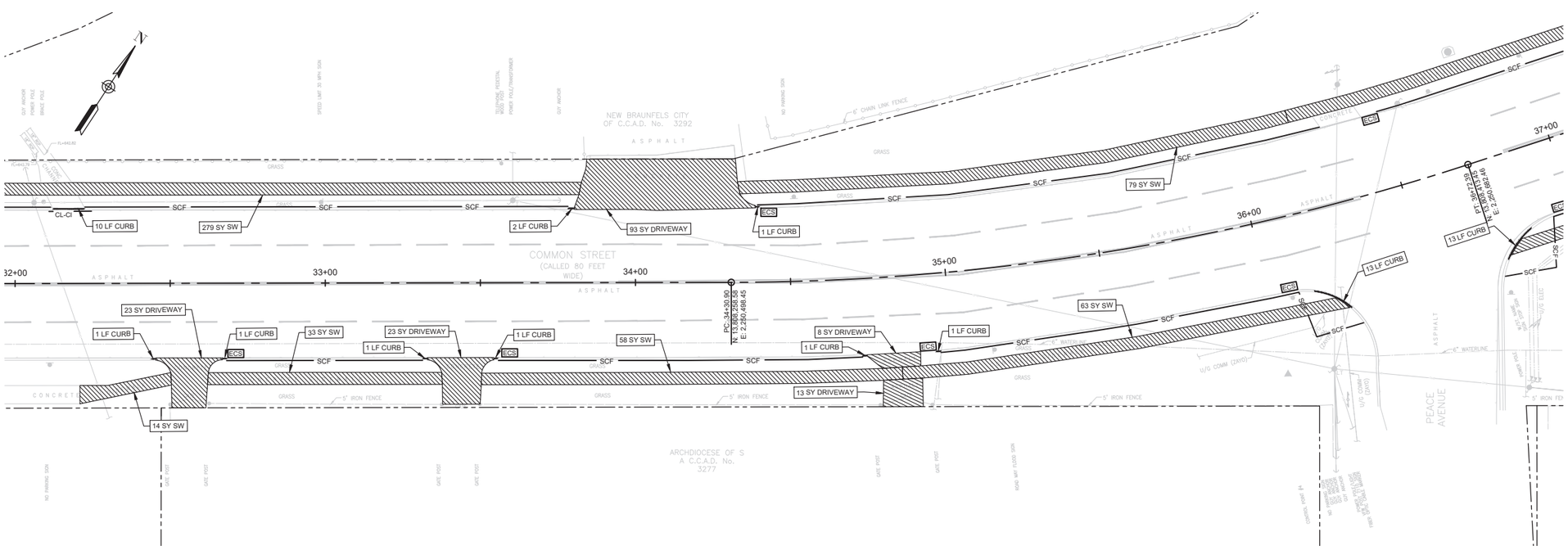

SIDEWALK - STA. 32+10 TO 36+20

REMOVAL LEGEND

- REMOVE CONCRETE CURB
- REMOVE CONCRETE SIDEWALK/ ASPHALT & CONCRETE DRIVEWAY
- XX — REMOVAL QUANTITY
- SCF — INSTALL SEDIMENT CONTROL FENCE
- CL-CI / CL-ROW — INSTALL EROSION CONTROL LOG AT CURB INLET OR RIGHT-OF-WAY
- ECS — INSTALL EROSION CONTROL SANDBAG
- INSTALL TREE PROTECTION FENCING

SYMBOL LEGEND:

- BACK FLOW PREVENTER
- "BB" INLET
- BENCHMARK
- BOLLARD / POST
- BRACE POLE
- BUSINESS SIGN (SEE DESCRIPTION)
- BURIED CABLE MARKER
- CLEAN OUT
- CREPE MYRTLE
- ELECTRIC JUNCTION BOX
- FIRE HYDRANT
- GUY ANCHOR
- COMMUNICATIONS HANDHOLE
- HISTORICAL MARKER
- IRRIGATION CONTROL VALVE
- FOUND IRON ROD / NAIL / "X" (SEE DESCRIPTION)
- MAILBOX
- POLE
- POWER POLE
- POWER POLE W/ CONDUIT
- POWER POLE W/ LIGHT
- POWER POLE W/ TRANSFORMER
- PIPE RISER
- SANITARY MANHOLE
- TELEPHONE MANHOLE
- SIGN (SEE DESCRIPTION)
- SIGN DOUBLE POST
- LIGHT POLE
- STORM MANHOLE
- TELEPHONE PEDESTAL
- TRAFFIC CONTROL BOX
- TRAFFIC SIGNAL POLE
- TRAFFIC PULL BOX
- TRAVERSE
- TREE (SEE DESCRIPTION)
- PALM
- TELEVISION PEDESTAL
- WATER MANHOLE
- WATER METER
- WATER VALVE
- YARD LIGHT
- CURB RAMP
- PAVERS
- RIGHT-OF-WAY
- CHAINLINK FENCE
- CONCRETE / GUARDRAIL / BARRIER
- OVERHEAD ELECTRIC
- OVERHEAD TRAFFIC SIGNAL
- WOOD FENCE
- WROUGHT IRON FENCE

ABBREVIATIONS LEGEND:

C.C.A.D.	COMAL COUNTY APPRAISAL DISTRICT
CMP	CORRUGATED METAL PIPE
COMM	COMMUNICATION
CONC	CONCRETE
ELEC	ELECTRIC
FL	FLOWLINE
FND	FOUND
G / GUT	GUTTER
IR	IRON ROD
LND	LANDSCAPED
No.	NUMBER
(NFV)	NOT FIELD VERIFIED
OHE	OVERHEAD ELECTRIC
PLT	PLANTER
PVC	POLYVINYL CHLORIDE PIPE
(R)	PER RECORD DRAWING
RCP	REINFORCED CONCRETE PIPE
SAN	SANITARY SEWER
STM	STORM SEWER
S/W	SIDEWALK
TC	TOP OF CURB
(TYP)	TYPICAL
U/G	UNDERGROUND
WCS	WITH CAP STAMPED
W.I.	WROUGHT IRON
W/	WITH
WTR	WATERLINE

NOTES:

1. CONTRACTOR SHALL PROTECT EXISTING UTILITIES.
2. ALL LEGEND ITEMS ARE NOT APPLICABLE TO ALL SHEETS.
3. THE CONTRACTOR SHALL PROTECT ALL TREES IF NOT SPECIFICALLY MARKED FOR REMOVAL OR PRUNING. INSTALL TREE PROTECTION FENCE AROUND THE TREES TO BE PROTECTED, AND MAINTAIN DURING THE CONSTRUCTION WORK.
4. CONTRACTOR SHALL NOT REMOVE OR ALTER ANY ITEM WITHIN THE PRIVATE PROPERTY UNLESS SPECIFICALLY NOTED ON THE PLAN.
5. NO WORK THAT COULD HAVE AN IMPACT TO THE EXISTING FEMA 100YR WSEL IS BEING PROPOSED FOR THIS PROJECT.
6. FPA NOTIFICATION FOR COMAL COUNTY/CITY WAS SUBMITTED IN WRITING ON 11/29/23.

0 20 40 Feet

REV	DESCRIPTION	DATE	APPR
0	ISSUED FOR BID	02/12/24	AG

DEMOLITION & SWPPP PLAN 4

COMMON STREET PEDESTRIAN IMPROVEMENTS

CITY OF NEW BRAUNFELS
550 Landa Street | New Braunfels, TX 78130

DESIGN BY: KM
DRAWN BY: EFC
CHECKED BY: JB
APPROVED BY: AG

City of New Braunfels

ENGINEER:
THE GOODMAN CORPORATION
3200 TRAVIS, SUITE 200
HOUSTON, TEXAS 77006
www.TheGoodmanCorp.com
(713) 951-7951
TBPELS Firm Registration No. 19990

SURVEYOR:
MBCO ENGINEERING + SURVEYING

STATE OF TEXAS
ASHISH GHOSH
111103
LICENSED PROFESSIONAL ENGINEER
2/13/2024

DATE: 02/12/2024
SCALE: AS NOTED

SHEET NUMBER
33 OF 97

W:\00_TGC Project Files\NBR100\CAD\NBR100_REMOVAL.dwg, 2/12/2024

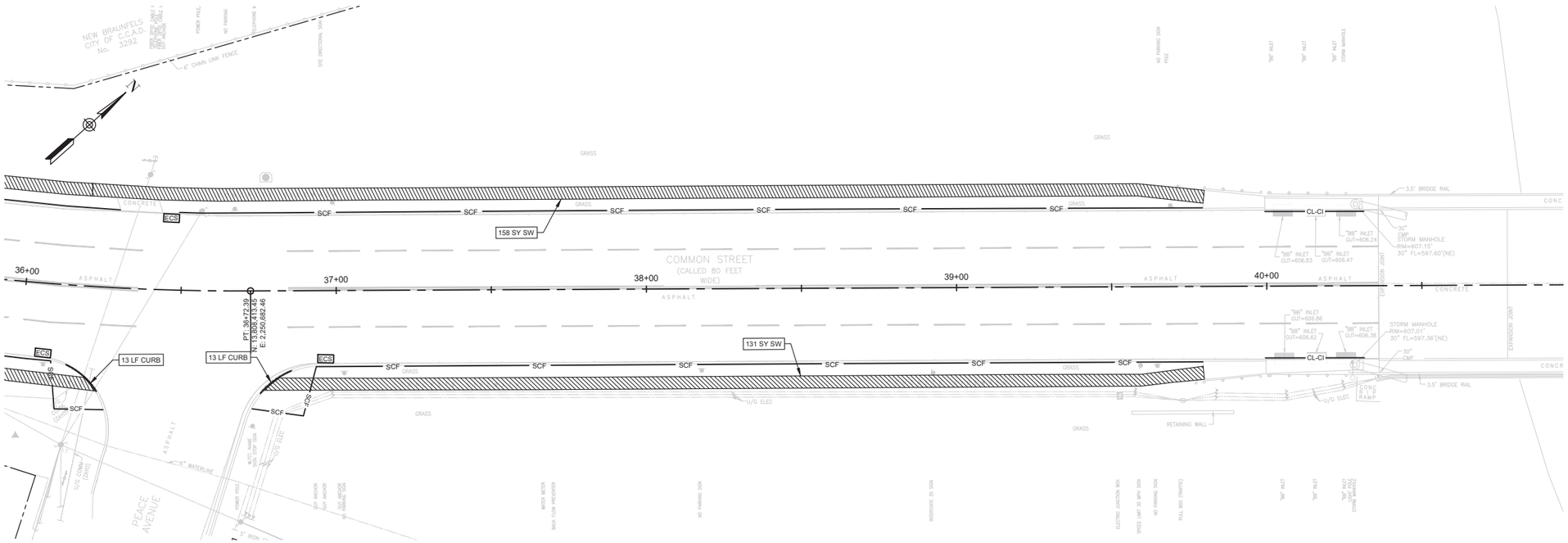

SIDEWALK - STA. 36+20 TO 40+80

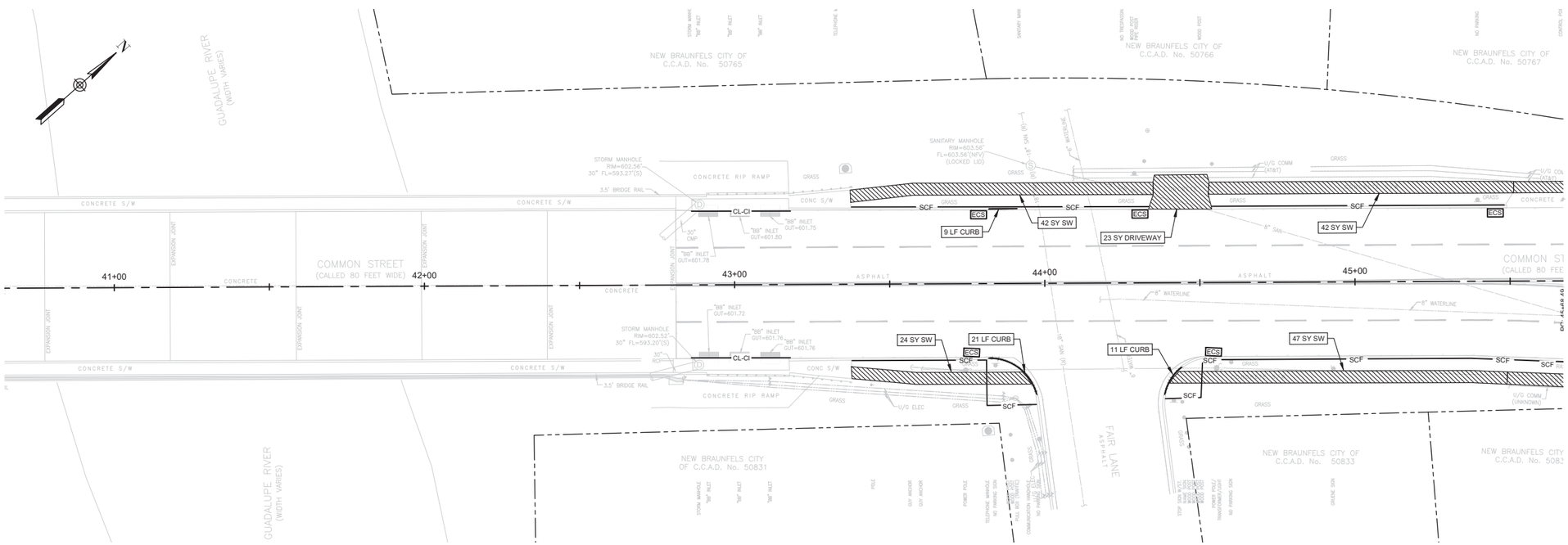

SIDEWALK - STA. 40+80 TO 45+50

REMOVAL LEGEND

- REMOVE CONCRETE CURB
- REMOVE CONCRETE SIDEWALK/ ASPHALT & CONCRETE DRIVEWAY
- XX — REMOVAL QUANTITY
- SCF — INSTALL SEDIMENT CONTROL FENCE
- CL-CI / CL-ROW — INSTALL EROSION CONTROL LOG AT CURB INLET OR RIGHT-OF-WAY
- ECS — INSTALL EROSION CONTROL SANDBAG
- INSTALL TREE PROTECTION FENCING

SYMBOL LEGEND:

- BACK FLOW PREVENTER
- "BB" INLET
- BENCHMARK
- BOLLARD / POST
- BRACE POLE
- BUSINESS SIGN (SEE DESCRIPTION)
- BURIED CABLE MARKER
- CLEAN OUT
- CREPE MYRTLE
- ELECTRIC JUNCTION BOX
- FIRE HYDRANT
- GUY ANCHOR
- COMMUNICATIONS HANDHOLE
- HISTORICAL MARKER
- IRRIGATION CONTROL VALVE
- FOUND IRON ROD / NAIL / "X" (SEE DESCRIPTION)
- MAILBOX
- POLE
- POWER POLE
- POWER POLE W/ CONDUIT
- POWER POLE W/ LIGHT
- POWER POLE W/ TRANSFORMER
- PIPE RISER
- SANITARY MANHOLE
- TELEPHONE MANHOLE
- SIGN (SEE DESCRIPTION)
- SIGN DOUBLE POST
- LIGHT POLE
- STORM MANHOLE
- TELEPHONE PEDESTAL
- TRAFFIC CONTROL BOX
- TRAFFIC SIGNAL POLE
- TRAFFIC PULL BOX
- TRAVERSE
- TREE (SEE DESCRIPTION)
- PALM
- TELEVISION PEDESTAL
- WATER MANHOLE
- WATER METER
- WATER VALVE
- YARD LIGHT
- CURB RAMP
- PAVERS
- RIGHT-OF-WAY
- CHAINLINK FENCE
- CONCRETE / GUARDRAIL / BARRIER
- OVERHEAD ELECTRIC
- OVERHEAD TRAFFIC SIGNAL
- WOOD FENCE
- WROUGHT IRON FENCE

ABBREVIATIONS LEGEND:

C.C.A.D.	COMAL COUNTY APPRAISAL DISTRICT
CMP	CORRUGATED METAL PIPE
COMM	COMMUNICATION
CONC	CONCRETE
ELEC	ELECTRIC
FL	FLOWLINE
FND	FOUND
G / GUT	GUTTER
IR	IRON ROD
LND	LANDSCAPED
No.	NUMBER
(NFV)	NOT FIELD VERIFIED
OHE	OVERHEAD ELECTRIC
PLT	PLANTER
PVC	POLYVINYL CHLORIDE PIPE
(R)	PER RECORD DRAWING
RCP	REINFORCED CONCRETE PIPE
SAN	SANITARY SEWER
STM	STORM SEWER
S/W	SIDEWALK
TC	TOP OF CURB
(TYP)	TYPICAL
U/G	UNDERGROUND
WCS	WITH CAP STAMPED
W.I.	WROUGHT IRON
W/	WITH
WTR	WATERLINE

NOTES:

1. CONTRACTOR SHALL PROTECT EXISTING UTILITIES.
2. ALL LEGEND ITEMS ARE NOT APPLICABLE TO ALL SHEETS.
3. THE CONTRACTOR SHALL PROTECT ALL TREES IF NOT SPECIFICALLY MARKED FOR REMOVAL OR PRUNING. INSTALL TREE PROTECTION FENCE AROUND THE TREES TO BE PROTECTED, AND MAINTAIN DURING THE CONSTRUCTION WORK.
4. CONTRACTOR SHALL NOT REMOVE OR ALTER ANY ITEM WITHIN THE PRIVATE PROPERTY UNLESS SPECIFICALLY NOTED ON THE PLAN.
5. NO WORK THAT COULD HAVE AN IMPACT TO THE EXISTING FEMA 100YR WSEL IS BEING PROPOSED FOR THIS PROJECT.
6. FPA NOTIFICATION FOR COMAL COUNTY/CITY WAS SUBMITTED IN WRITING ON 11/29/23.

0 20 40 Feet

REV	DESCRIPTION	DATE	APPR
0	ISSUED FOR BID	02/12/24	AG

DEMOLITION & SWPPP PLAN 5

COMMON STREET PEDESTRIAN IMPROVEMENTS

CITY OF NEW BRAUNFELS
550 Landa Street | New Braunfels, TX 78130

DESIGN BY: KM
DRAWN BY: EFC
CHECKED BY: JB
APPROVED BY: AG

City of New Braunfels

ENGINEER:
THE GOODMAN CORPORATION
3200 TRAVIS, SUITE 200
HOUSTON, TEXAS 77006
www.TheGoodmanCorp.com
(713) 951-7951
TBPELS Firm Registration No. 19990

SURVEYOR:
MBCO ENGINEERING + SURVEYING

STATE OF TEXAS
ASHISH GHOSH
111103
LICENSED PROFESSIONAL ENGINEER
2/13/2024

DATE: 02/12/2024
SCALE: AS NOTED

SHEET NUMBER
34 OF 97

W:\00_TGC Project Files\NBR100\CAD\NBR100_REMOVAL.dwg, 2/12/2024

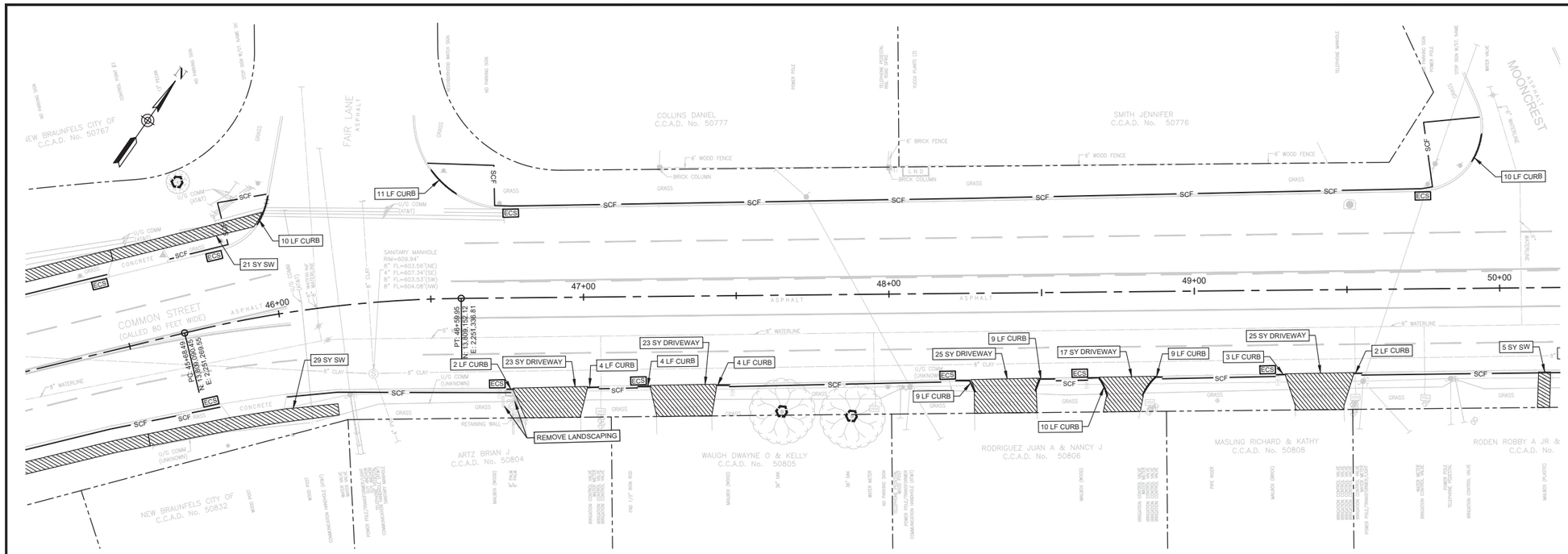

SIDEWALK - STA. 45+50 TO 50+00

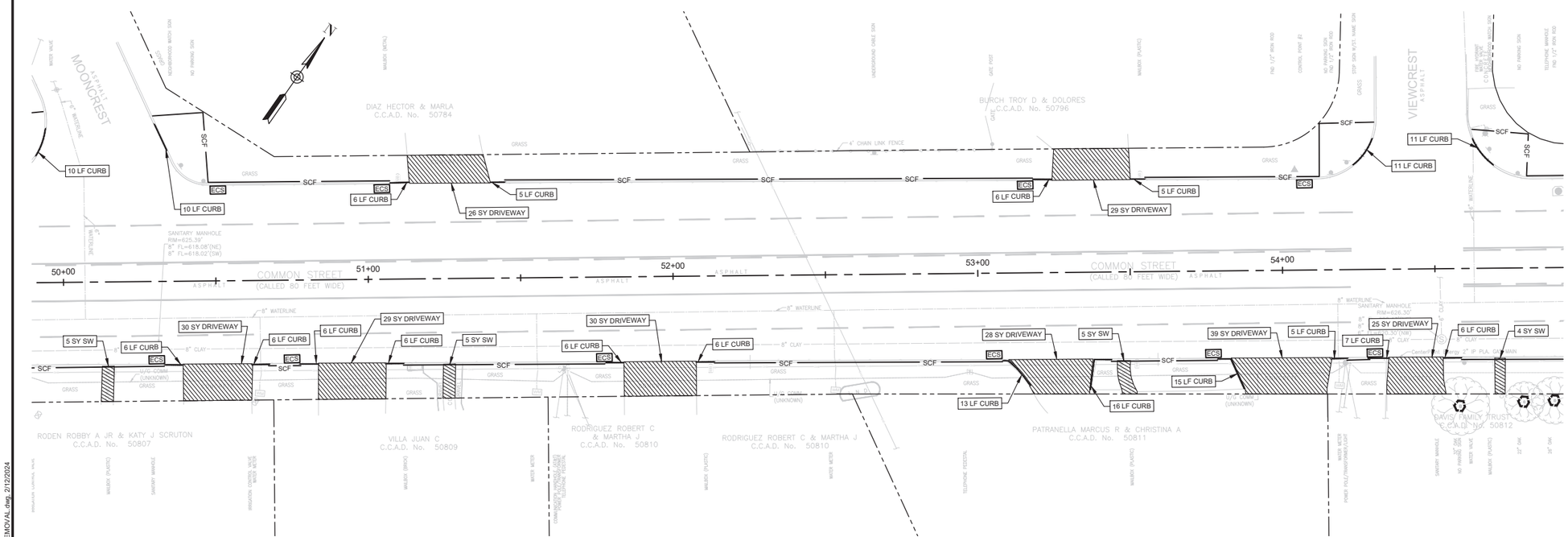

SIDEWALK - STA. 50+00 TO 54+75

REMOVAL LEGEND

- REMOVE CONCRETE CURB
- REMOVE CONCRETE SIDEWALK/ ASPHALT & CONCRETE DRIVEWAY
- XX — REMOVAL QUANTITY
- SCF — INSTALL SEDIMENT CONTROL FENCE
- CL-CI / CL-ROW — INSTALL EROSION CONTROL LOG AT CURB INLET OR RIGHT-OF-WAY
- ECS — INSTALL EROSION CONTROL SANDBAG
- INSTALL TREE PROTECTION FENCING

SYMBOL LEGEND:

- BACK FLOW PREVENTER
- "BB" INLET
- BENCHMARK
- BOLLARD / POST
- BRACE POLE
- BUSINESS SIGN (SEE DESCRIPTION)
- BURIED CABLE MARKER
- CLEAN OUT
- CREPE MYRTLE
- ELECTRIC JUNCTION BOX
- FIRE HYDRANT
- GUY ANCHOR
- COMMUNICATIONS HANDHOLE
- HISTORICAL MARKER
- IRRIGATION CONTROL VALVE
- FOUND IRON ROD / NAIL / "X" (SEE DESCRIPTION)
- MAILBOX
- POLE
- POWER POLE
- POWER POLE W/ CONDUIT
- POWER POLE W/ LIGHT
- POWER POLE W/ TRANSFORMER
- PIPE RISER
- SANITARY MANHOLE
- TELEPHONE MANHOLE
- SIGN (SEE DESCRIPTION)
- SIGN DOUBLE POST
- LIGHT POLE
- STORM MANHOLE
- TELEPHONE PEDESTAL
- TRAFFIC CONTROL BOX
- TRAFFIC SIGNAL POLE
- TRAFFIC PULL BOX
- TRAVERSE
- TREE (SEE DESCRIPTION)
- PALM
- TELEVISION PEDESTAL
- WATER MANHOLE
- WATER METER
- WATER VALVE
- YARD LIGHT
- CURB RAMP
- PAVERS
- RIGHT-OF-WAY
- CHAINLINK FENCE
- CONCRETE / GUARDRAIL / BARRIER
- OVERHEAD ELECTRIC
- OVERHEAD TRAFFIC SIGNAL
- WOOD FENCE
- WROUGHT IRON FENCE

ABBREVIATIONS LEGEND:

C.C.A.D.	COMAL COUNTY APPRAISAL DISTRICT
CMP	CORRUGATED METAL PIPE
COMM	COMMUNICATION
CONC	CONCRETE
ELEC	ELECTRIC
FL	FLOWLINE
FND	FOUND
G / GUT	GUTTER
IR	IRON ROD
LND	LANDSCAPED
No.	NUMBER
(NFV)	NOT FIELD VERIFIED
OHE	OVERHEAD ELECTRIC
PLT	PLANTER
PVC	POLYVINYL CHLORIDE PIPE
(R)	PER RECORD DRAWING
RCP	REINFORCED CONCRETE PIPE
SAN	SANITARY SEWER
STM	STORM SEWER
S/W	SIDEWALK
TC	TOP OF CURB
(TYP)	TYPICAL
U/G	UNDERGROUND
WCS	WITH CAP STAMPED
W.I.	WROUGHT IRON
W/	WITH
WTR	WATERLINE

NOTES:

1. CONTRACTOR SHALL PROTECT EXISTING UTILITIES.
2. ALL LEGEND ITEMS ARE NOT APPLICABLE TO ALL SHEETS.
3. THE CONTRACTOR SHALL PROTECT ALL TREES IF NOT SPECIFICALLY MARKED FOR REMOVAL OR PRUNING. INSTALL TREE PROTECTION FENCE AROUND THE TREES TO BE PROTECTED, AND MAINTAIN DURING THE CONSTRUCTION WORK.
4. CONTRACTOR SHALL NOT REMOVE OR ALTER ANY ITEM WITHIN THE PRIVATE PROPERTY UNLESS SPECIFICALLY NOTED ON THE PLAN.
5. NO WORK THAT COULD HAVE AN IMPACT TO THE EXISTING FEMA 100YR WSEL IS BEING PROPOSED FOR THIS PROJECT.
6. FPA NOTIFICATION FOR COMAL COUNTY/CITY WAS SUBMITTED IN WRITING ON 11/29/23.

0 20 40 Feet

REV	DESCRIPTION	DATE	APPR
0	ISSUED FOR BID	02/12/24	AG

DEMOLITION & SWPPP PLAN 6

COMMON STREET PEDESTRIAN IMPROVEMENTS

CITY OF NEW BRAUNFELS
550 Landa Street | New Braunfels, TX 78130

DESIGN BY: KM
DRAWN BY: EFC
CHECKED BY: JB
APPROVED BY: AG

City of New Braunfels

ENGINEER:
THE GOODMAN CORPORATION
3200 TRAVIS, SUITE 200
HOUSTON, TEXAS 77006
www.TheGoodmanCorp.com
(713) 951-7951
TBPELS Firm Registration No. 19990

SURVEYOR:
MBCO ENGINEERING + SURVEYING

STATE OF TEXAS
ASHISH GHOSH
111103
LICENSED
PROFESSIONAL ENGINEER
2/13/2024

DATE: 02/12/2024
SCALE: AS NOTED

SHEET NUMBER
35 OF 97

W:\00_TGC Project Files\MBR100\CAD\NBR109_REMOVAL.dwg, 2/12/2024

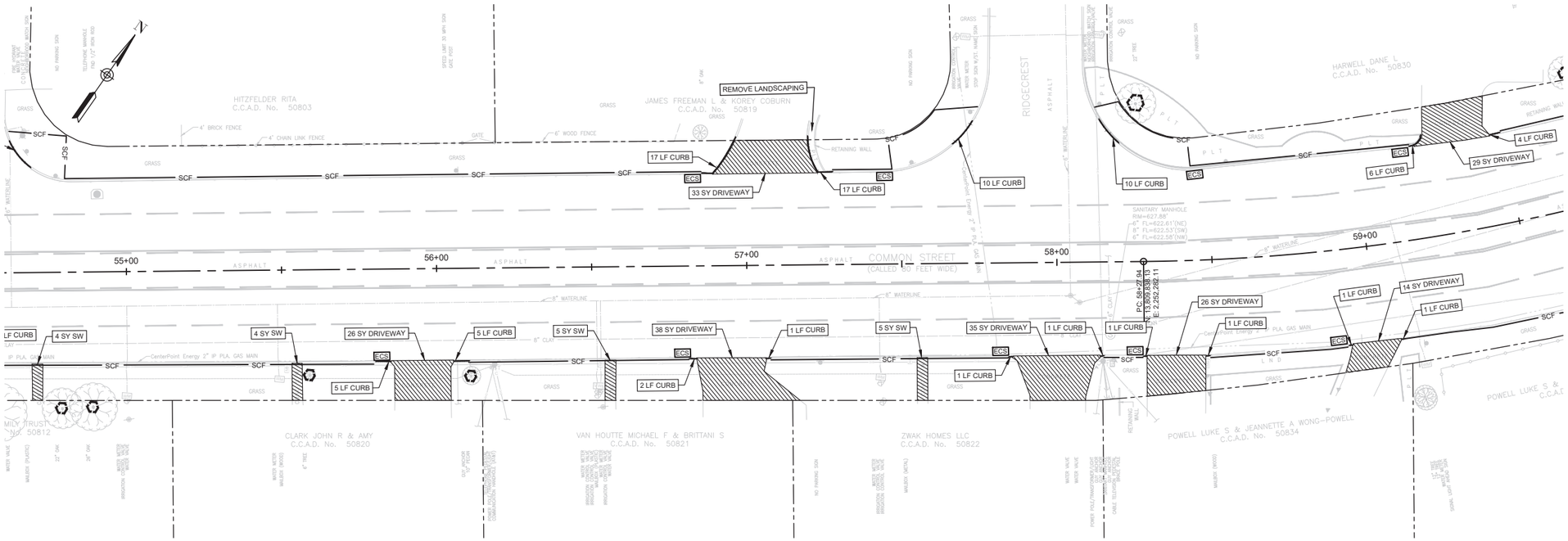

SIDEWALK - STA. 54+75 TO 59+30

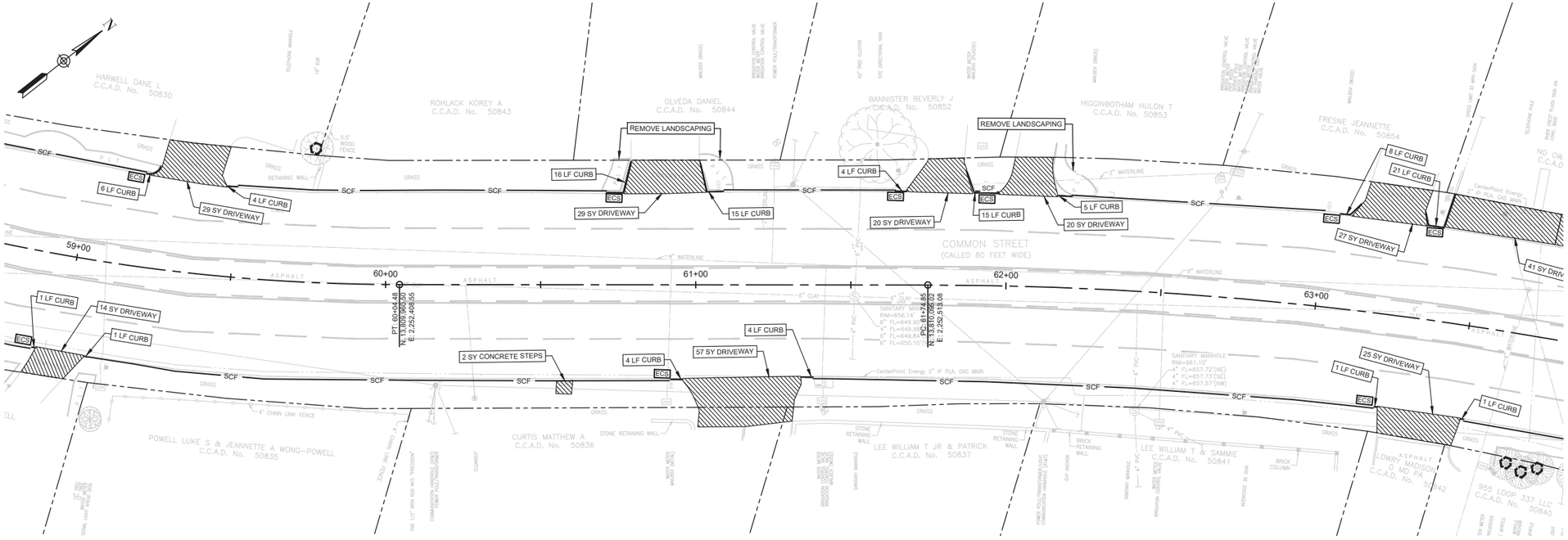

SIDEWALK - STA. 59+30 TO 63+00

REMOVAL LEGEND

- REMOVE CONCRETE CURB
- REMOVE CONCRETE SIDEWALK/ ASPHALT & CONCRETE DRIVEWAY
- XX — REMOVAL QUANTITY
- SCF — INSTALL SEDIMENT CONTROL FENCE
- CL-CI / CL-ROW — INSTALL EROSION CONTROL LOG AT CURB INLET OR RIGHT-OF-WAY
- ECS — INSTALL EROSION CONTROL SANDBAG
- INSTALL TREE PROTECTION FENCING

SYMBOL LEGEND:

- BACK FLOW PREVENTER
- "BB" INLET
- BENCHMARK
- BOLLARD / POST
- BRACE POLE
- BUSINESS SIGN (SEE DESCRIPTION)
- BURIED CABLE MARKER
- CLEAN OUT
- CREPE MYRTLE
- ELECTRIC JUNCTION BOX
- FIRE HYDRANT
- GUY ANCHOR
- COMMUNICATIONS HANDHOLE
- HISTORICAL MARKER
- IRRIGATION CONTROL VALVE
- FOUND IRON ROD / NAIL / "X" (SEE DESCRIPTION)
- (MB) MAILBOX
- POLE
- POWER POLE
- POWER POLE W/ CONDUIT
- POWER POLE W/ LIGHT
- POWER POLE W/ TRANSFORMER
- PIPE RISER
- (S) SANITARY MANHOLE
- TELEPHONE MANHOLE
- SIGN (SEE DESCRIPTION)
- SIGN DOUBLE POST
- LIGHT POLE
- (D) STORM MANHOLE
- (T) TELEPHONE PEDESTAL
- (TS) TRAFFIC CONTROL BOX
- TRAFFIC SIGNAL POLE
- TRAFFIC PULL BOX
- TRAVERSE
- TREE (SEE DESCRIPTION)
- PALM
- (T) TELEVISION PEDESTAL
- (W) WATER MANHOLE
- (WM) WATER METER
- WATER VALVE
- YARD LIGHT
- CURB RAMP
- PAVERS
- RIGHT-OF-WAY
- CHAINLINK FENCE
- CONCRETE / GUARDRAIL / BARRIER
- OVERHEAD ELECTRIC
- OVERHEAD TRAFFIC SIGNAL
- WOOD FENCE
- WROUGHT IRON FENCE

ABBREVIATIONS LEGEND:

C.C.A.D.	COMAL COUNTY APPRAISAL DISTRICT
CMP	CORRUGATED METAL PIPE
COMM	COMMUNICATION
CONC	CONCRETE
ELEC	ELECTRIC
FL	FLOWLINE
FND	FOUND
G / GUT	GUTTER
IR	IRON ROD
LND	LANDSCAPED
No.	NUMBER
(NFV)	NOT FIELD VERIFIED
OHE	OVERHEAD ELECTRIC
PLT	PLANTER
PVC	POLYVINYL CHLORIDE PIPE
(R)	PER RECORD DRAWING
RCP	REINFORCED CONCRETE PIPE
SAN	SANITARY SEWER
STM	STORM SEWER
S/W	SIDEWALK
TC	TOP OF CURB
(TYP)	TYPICAL
U/G	UNDERGROUND
WCS	WITH CAP STAMPED
W.I.	WROUGHT IRON
W/	WITH
WTR	WATERLINE

NOTES:

1. CONTRACTOR SHALL PROTECT EXISTING UTILITIES.
2. ALL LEGEND ITEMS ARE NOT APPLICABLE TO ALL SHEETS.
3. THE CONTRACTOR SHALL PROTECT ALL TREES IF NOT SPECIFICALLY MARKED FOR REMOVAL OR PRUNING. INSTALL TREE PROTECTION FENCE AROUND THE TREES TO BE PROTECTED, AND MAINTAIN DURING THE CONSTRUCTION WORK.
4. CONTRACTOR SHALL NOT REMOVE OR ALTER ANY ITEM WITHIN THE PRIVATE PROPERTY UNLESS SPECIFICALLY NOTED ON THE PLAN.
5. NO WORK THAT COULD HAVE AN IMPACT TO THE EXISTING FEMA 100YR WSEL IS BEING PROPOSED FOR THIS PROJECT.
6. FPA NOTIFICATION FOR COMAL COUNTY/CITY WAS SUBMITTED IN WRITING ON 11/29/23.

0 20 40 Feet

REV	DESCRIPTION	DATE	APPR
0	ISSUED FOR BID	02/12/24	AG

DEMOLITION & SWPPP PLAN 7

COMMON STREET PEDESTRIAN IMPROVEMENTS

CITY OF NEW BRAUNFELS
550 Landa Street | New Braunfels, TX 78130

DESIGN BY: KM
DRAWN BY: EFC
CHECKED BY: JB
APPROVED BY: AG

City of New Braunfels

ENGINEER:
THE GOODMAN CORPORATION
3200 TRAVIS, SUITE 200
HOUSTON, TEXAS 77006
www.TheGoodmanCorp.com
(713) 951-7951
TBPELS Firm Registration No. 19990

SURVEYOR:
MBCO ENGINEERING + SURVEYING

STATE OF TEXAS
ASHISH GHOSH
111103
LICENSED
PROFESSIONAL ENGINEER
2/13/2024

DATE: 02/12/2024
SCALE: AS NOTED

SHEET NUMBER
36 OF 97

W:\00_TGC Project Files\MBR100\CAD\MBR100_REMOVAL.dwg, 2/12/2024

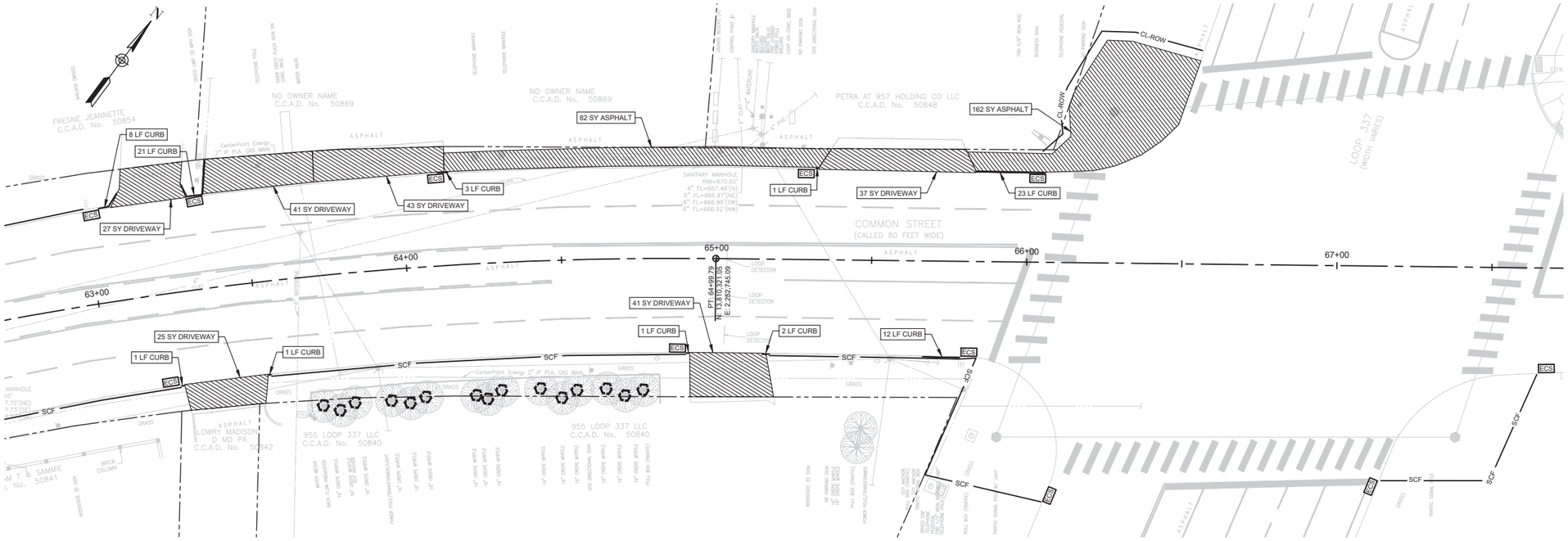

SIDEWALK - STA. 63+00 TO 67+50

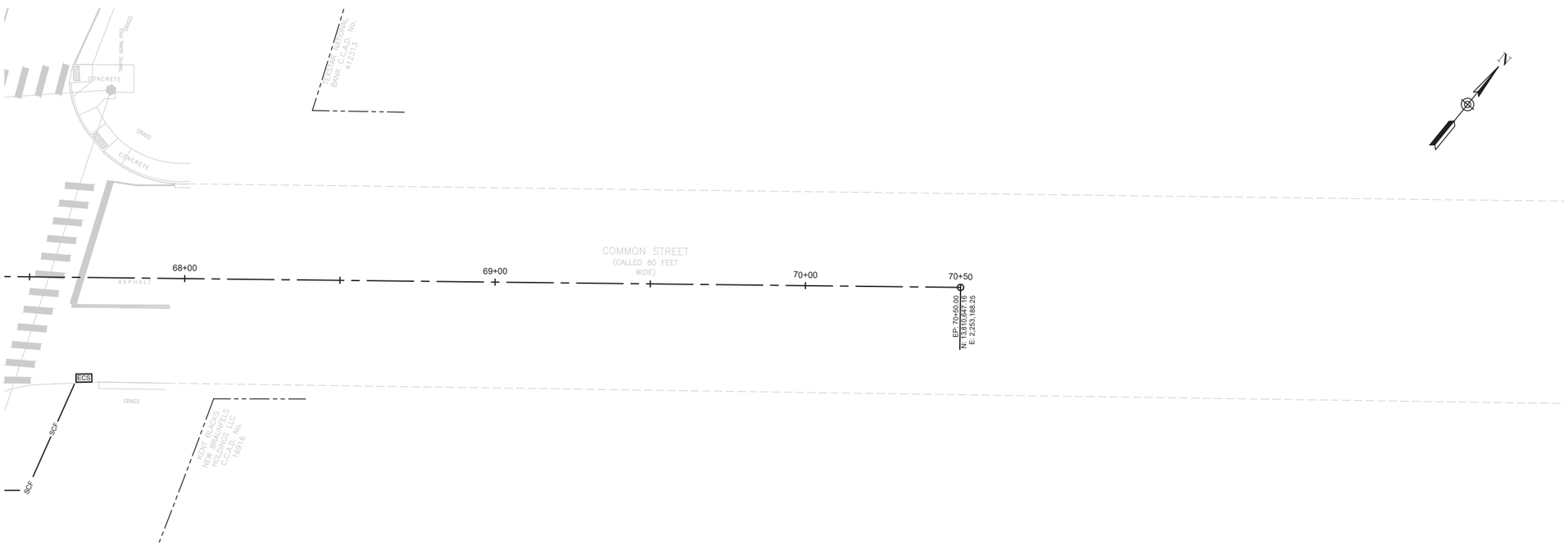

SIDEWALK - STA. 67+50 TO 70+50

NOTES:

1. CONTRACTOR SHALL PROTECT EXISTING UTILITIES.
2. ALL LEGEND ITEMS ARE NOT APPLICABLE TO ALL SHEETS.
3. THE CONTRACTOR SHALL PROTECT ALL TREES IF NOT SPECIFICALLY MARKED FOR REMOVAL OR PRUNING. INSTALL TREE PROTECTION FENCE AROUND THE TREES TO BE PROTECTED, AND MAINTAIN DURING THE CONSTRUCTION WORK.
4. CONTRACTOR SHALL NOT REMOVE OR ALTER ANY ITEM WITHIN THE PRIVATE PROPERTY UNLESS SPECIFICALLY NOTED ON THE PLAN.
5. NO WORK THAT COULD HAVE AN IMPACT TO THE EXISTING FEMA 100YR WSEL IS BEING PROPOSED FOR THIS PROJECT.
6. FPA NOTIFICATION FOR COMAL COUNTY/CITY WAS SUBMITTED IN WRITING ON 11/29/23.

REMOVAL LEGEND

- REMOVE CONCRETE CURB
- REMOVE CONCRETE SIDEWALK/ ASPHALT & CONCRETE DRIVEWAY
- XX — REMOVAL QUANTITY
- SCF — INSTALL SEDIMENT CONTROL FENCE
- CL-CI / CL-ROW — INSTALL EROSION CONTROL LOG AT CURB INLET OR RIGHT-OF-WAY
- ECS — INSTALL EROSION CONTROL SANDBAG
- INSTALL TREE PROTECTION FENCING

SYMBOL LEGEND:

- BACK FLOW PREVENTER
- "BB" INLET
- BENCHMARK
- BOLLARD / POST
- BRACE POLE
- BUSINESS SIGN (SEE DESCRIPTION)
- BURIED CABLE MARKER
- CLEAN OUT
- CREPE MYRTLE
- ELECTRIC JUNCTION BOX
- FIRE HYDRANT
- GUY ANCHOR
- COMMUNICATIONS HANDHOLE
- HISTORICAL MARKER
- IRRIGATION CONTROL VALVE
- FOUND IRON ROD / NAIL / "X" (SEE DESCRIPTION)
- MAILBOX
- POLE
- POWER POLE
- POWER POLE W/ CONDUIT
- POWER POLE W/ LIGHT
- POWER POLE W/ TRANSFORMER
- PIPE RISER
- SANITARY MANHOLE
- TELEPHONE MANHOLE
- SIGN (SEE DESCRIPTION)
- SIGN DOUBLE POST
- LIGHT POLE
- STORM MANHOLE
- TELEPHONE PEDESTAL
- TRAFFIC CONTROL BOX
- TRAFFIC SIGNAL POLE
- TRAFFIC PULL BOX
- TRAVERSE
- TREE (SEE DESCRIPTION)
- PALM
- TELEVISION PEDESTAL
- WATER MANHOLE
- WATER METER
- WATER VALVE
- YARD LIGHT
- CURB RAMP
- PAVERS
- RIGHT-OF-WAY
- CHAINLINK FENCE
- CONCRETE / GUARDRAIL / BARRIER
- OVERHEAD ELECTRIC
- OVERHEAD TRAFFIC SIGNAL
- WOOD FENCE
- WROUGHT IRON FENCE

ABBREVIATIONS LEGEND:

C.C.A.D.	COMAL COUNTY APPRAISAL DISTRICT
CMP	CORRUGATED METAL PIPE
COMM	COMMUNICATION
CONC	CONCRETE
ELEC	ELECTRIC
FL	FLOWLINE
FND	FOUND
G / GUT	GUTTER
IR	IRON ROD
LND	LANDSCAPED
No.	NUMBER
(NFV)	NOT FIELD VERIFIED
OHE	OVERHEAD ELECTRIC
PLT	PLANTER
PVC	POLYVINYL CHLORIDE PIPE
(R)	PER RECORD DRAWING
RCP	REINFORCED CONCRETE PIPE
SAN	SANITARY SEWER
STM	STORM SEWER
S/W	SIDEWALK
TC	TOP OF CURB
(TYP)	TYPICAL
U/G	UNDERGROUND
WCS	WITH CAP STAMPED
W.I.	WROUGHT IRON
W/	WITH
WTR	WATERLINE

0 20 40 Feet

REV	DATE	DESCRIPTION	APPR
0	02/12/24	ISSUED FOR BID	AG

DEMOLITION & SWPPP PLAN 8

COMMON STREET PEDESTRIAN IMPROVEMENTS

CITY OF NEW BRAUNFELS
550 Landa Street | New Braunfels, TX 78130

DESIGN BY: KM
DRAWN BY: EFC
CHECKED BY: JB
APPROVED BY: AG

City of New Braunfels

ENGINEER:
THE GOODMAN CORPORATION
3200 TRAVIS, SUITE 200
HOUSTON, TEXAS 77006
www.TheGoodmanCorp.com
(713) 951-7951
TBPELS Firm Registration No. 19990

SURVEYOR:
MBCO ENGINEERING + SURVEYING

STATE OF TEXAS
ASHISH GHOSH
111103
LICENSED
PROFESSIONAL ENGINEER
2/13/2024

DATE: 02/12/2024
SCALE: AS NOTED

SHEET NUMBER
37 OF 97

W:\00_TGC Project Files\NBR100\CAD\NBR100_REMOVAL.dwg, 2/12/2024

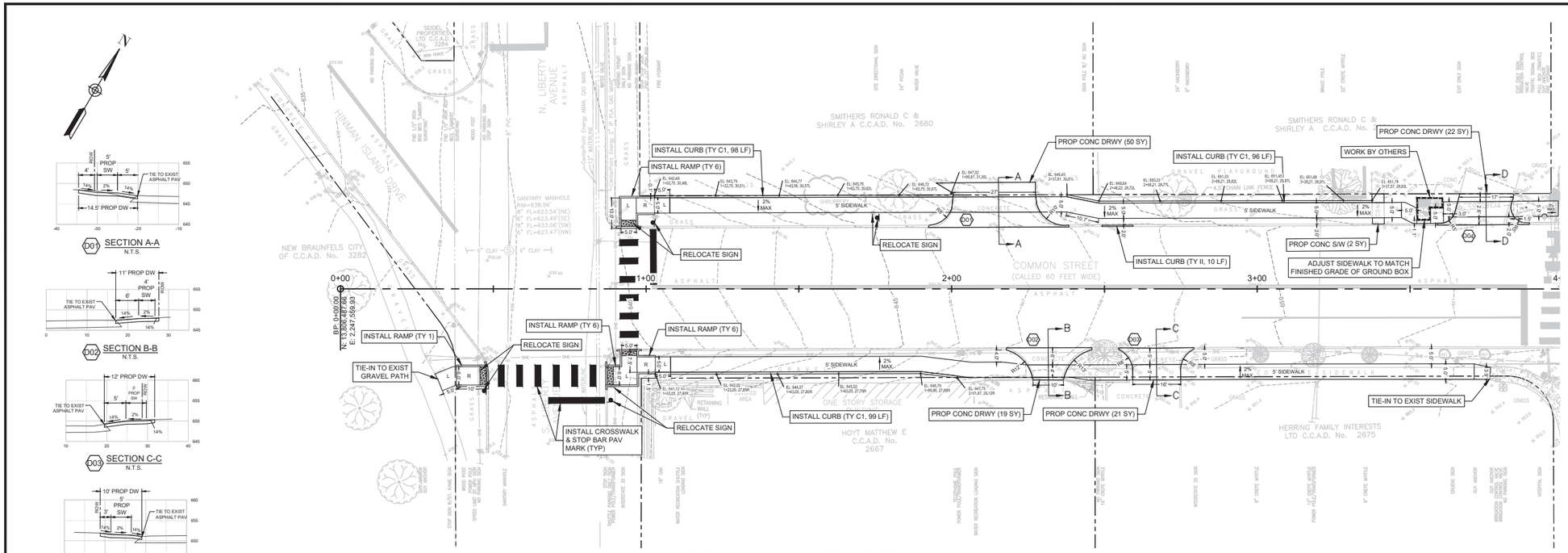

SIDEWALK - STA. 0+00 TO 3+75

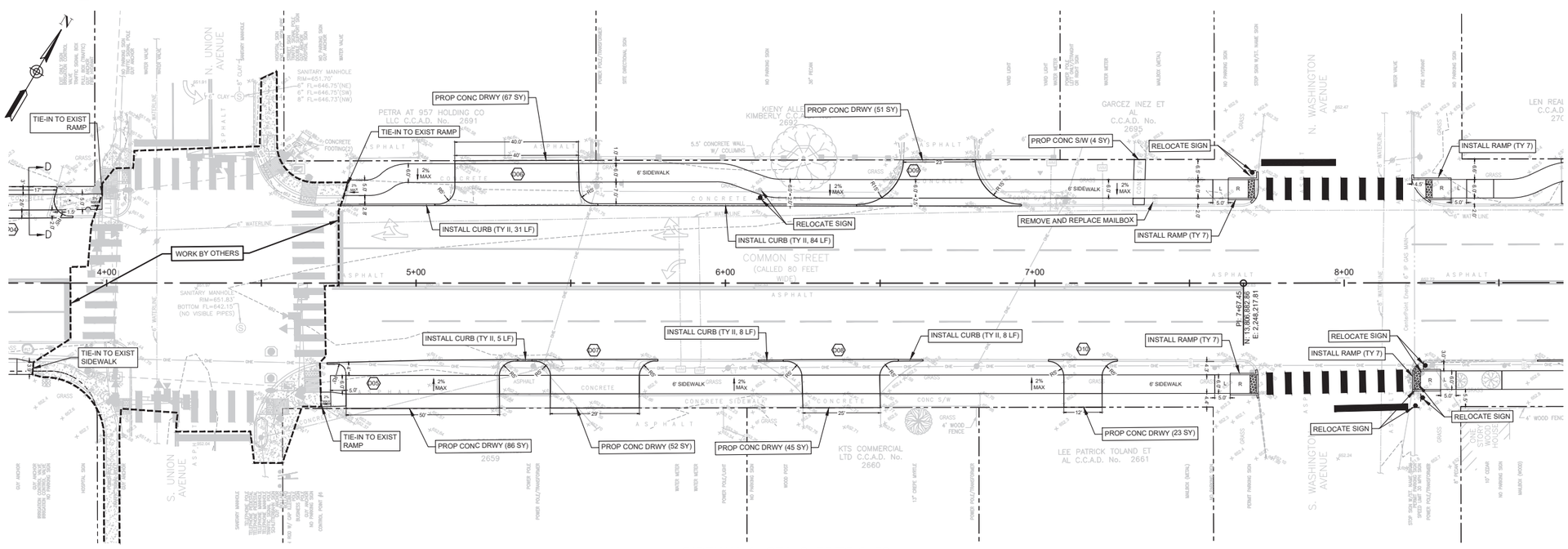

SIDEWALK - STA. 3+75 TO 8+50

SYMBOL LEGEND:

- BACK FLOW PREVENTER
- "BB" INLET
- BENCHMARK
- BOLLARD / POST
- BRACE POLE
- BUSINESS SIGN (SEE DESCRIPTION)
- BURIED CABLE MARKER
- CLEAN OUT
- CREPE MYRTLE
- ELECTRIC JUNCTION BOX
- FIRE HYDRANT
- GUY ANCHOR
- COMMUNICATIONS HANDHOLE
- HISTORICAL MARKER
- IRRIGATION CONTROL VALVE
- FOUND IRON ROD / NAIL / "X" (SEE DESCRIPTION)
- MAILBOX
- POLE
- POWER POLE
- POWER POLE W/ CONDUIT
- POWER POLE W/ LIGHT
- POWER POLE W/ TRANSFORMER
- PIPE RISER
- SANITARY MANHOLE
- TELEPHONE MANHOLE
- SIGN (SEE DESCRIPTION)
- SIGN DOUBLE POST
- LIGHT POLE
- STORM MANHOLE
- TELEPHONE PEDESTAL
- TRAFFIC CONTROL BOX
- TRAFFIC SIGNAL POLE
- TRAFFIC PULL BOX
- TRAVERSE
- TREE (SEE DESCRIPTION)
- PALM
- TELEVISION PEDESTAL
- WATER MANHOLE
- WATER METER
- WATER VALVE
- YARD LIGHT
- CURB RAMP
- PAVERS
- RIGHT-OF-WAY
- CHAINLINK FENCE
- CONCRETE / GUARDRAIL / BARRIER
- OVERHEAD ELECTRIC
- OVERHEAD TRAFFIC SIGNAL
- WOOD FENCE
- WROUGHT IRON FENCE

ABBREVIATIONS LEGEND:

C.C.A.D.	COMAL COUNTY APPRAISAL DISTRICT
CMP	CORRUGATED METAL PIPE
COMM	COMMUNICATION
CONC	CONCRETE
ELEC	ELECTRIC
FL	FLOWLINE
FND	FOUND
G / GUT	GUTTER
IR	IRON ROD
LND	LANDSCAPED
No.	NUMBER
(NFV)	NOT FIELD VERIFIED
OHE	OVERHEAD ELECTRIC
PLT	PLANTER
PVC	POLYVINYL CHLORIDE PIPE
(R)	PER RECORD DRAWING
RCP	REINFORCED CONCRETE PIPE
SAN	SANITARY SEWER
STM	STORM SEWER
S/W	SIDEWALK
TC	TOP OF CURB
(TYP)	TYPICAL
U/G	UNDERGROUND
WCS	WITH CAP STAMPED
W.I.	WROUGHT IRON
W/	WITH
WTR	WATERLINE

PROPOSED LEGEND

- D47 — PROPOSED DRIVEWAY NUMBER
- D51 — PROPOSED DRIVEWAY NUMBER WITH CROSS SLOPE >5%
- R — RAMP
- F — FLARE
- L — LANDING

NOTES:

1. EXISTING GROUND CONDITIONS ARE SUCH THAT STORM RUNOFF SHEET FLOWS FROM RESIDENTIAL PROPERTIES TO COMMON ST AND THEN GENERALLY TO THE COMAL RIVER ON THE WESTERN SIDE OF THE PROJECT AND TO THE GUADALUPE RIVER ON THE EASTERN SIDE OF THE PROJECT.
2. EXISTING DRAINAGE TO REMAIN UNCHANGED. PROPOSED SIDEWALK SHALL NOT IMPEDE SURFACE RUNOFF NOR CREATE PONDING AT ANY POINT ALONG PROPOSED ALIGNMENT.
3. CONTRACTOR IS RESPONSIBLE FOR SELECTING ACTUAL ENTRANCE/EXIT LOCATIONS AND MAKING PROPER ARRANGEMENTS TO AVOID UTILITY, FACILITY AND TRAFFIC CONFLICTS AS REQUIRED. CRANE MAT OR SIMILAR DEVICES SHALL BE USED AS NEEDED.
4. CONTRACTOR SHALL TAKE PROPER PRECAUTIONS TO AVOID TRACKING SOIL & DEBRIS ONTO ROADWAY AND IS RESPONSIBLE FOR REMOVING ANY SOIL & DEBRIS INCIDENTAL TO CONSTRUCTION FROM ROADWAY AS SOON AS PRACTICABLE.
5. CONTRACTOR IS RESPONSIBLE FOR LOCATING AND UTILIZING CONCRETE WASHOUT AREA/CONTAINMENT DURING CONSTRUCTION.
6. INLET PROTECTION BARRIERS (SAND TUBE, SILT SACK OR SIMILAR) SHALL BE USED ON HARD SURFACES (E.G. CONCRETE DITCH EMBANKMENT AND ROADWAYS) WHERE SILT FENCE CANNOT BE INSTALLED. EXISTING CURB INLETS ADJACENT AND DOWNSTREAM TO THE PROJECT SHALL BE PROTECTED, INCLUDING THOSE ACROSS THE STREET. NOT ALL INLETS ARE SHOWN ON PLAN.
7. CONTRACTOR SHALL MINIMIZE DISTURBANCE OF EXISTING SURFACE DUE TO CONSTRUCTION WORK, MATERIAL STORAGE AND TRANSPORTATION OF MATERIAL AND EQUIPMENT. CONTRACTOR IS RESPONSIBLE FOR RESURFACING DISTURBED AREAS TO MATCH EXISTING CONDITIONS OR MAKE IT BETTER.
8. NO WORK THAT COULD HAVE AN IMPACT TO THE EXISTING FEMA 100YR WSEL IS BEING PROPOSED FOR THIS PROJECT.
9. FPA NOTIFICATION FOR COMAL COUNTY/CITY WAS SUBMITTED IN WRITING ON 11/29/23.

0 20 40 Feet

REV	DESCRIPTION	DATE	APPR
0	ISSUED FOR BID	02/12/24	AG

SIDEWALK PLAN 1

COMMON STREET PEDESTRIAN IMPROVEMENTS

CITY OF NEW BRAUNFELS
550 Landa Street | New Braunfels, TX 78130

DESIGN BY: KM
DRAWN BY: EFC
CHECKED BY: JB
APPROVED BY: AG

City of New Braunfels

ENGINEER:
THE GOODMAN CORPORATION
3200 TRAVIS, SUITE 200
HOUSTON, TEXAS 77006
www.TheGoodmanCorp.com
(713) 951-7951
TBPELS Firm Registration No. 19990

SURVEYOR:
MBCO ENGINEERING + SURVEYING

STATE OF TEXAS
ASHISH GHOSH
111103
LICENSED
PROFESSIONAL ENGINEER
2/13/2024

DATE: 02/12/2024
SCALE: AS NOTED

W:\00_TGC Project Files\MBR100\CAD\NBR109_SW_PLAN.dwg, 2/12/2024

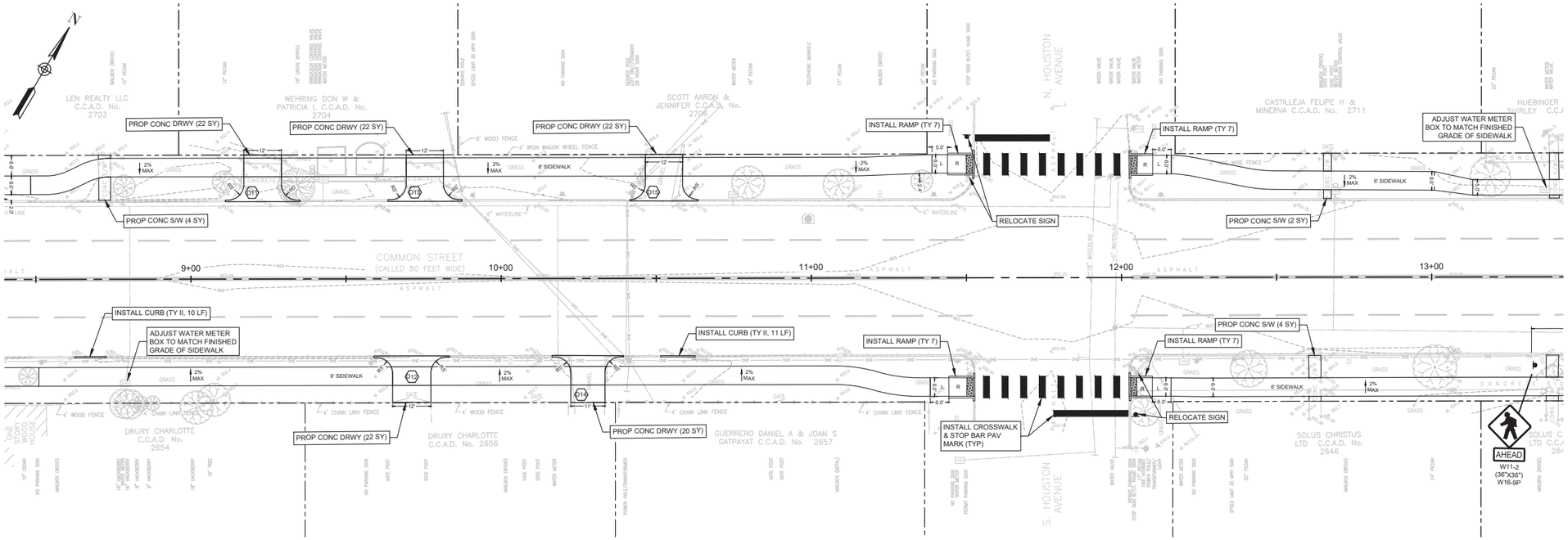

SIDEWALK - STA. 8+50 TO 13+25

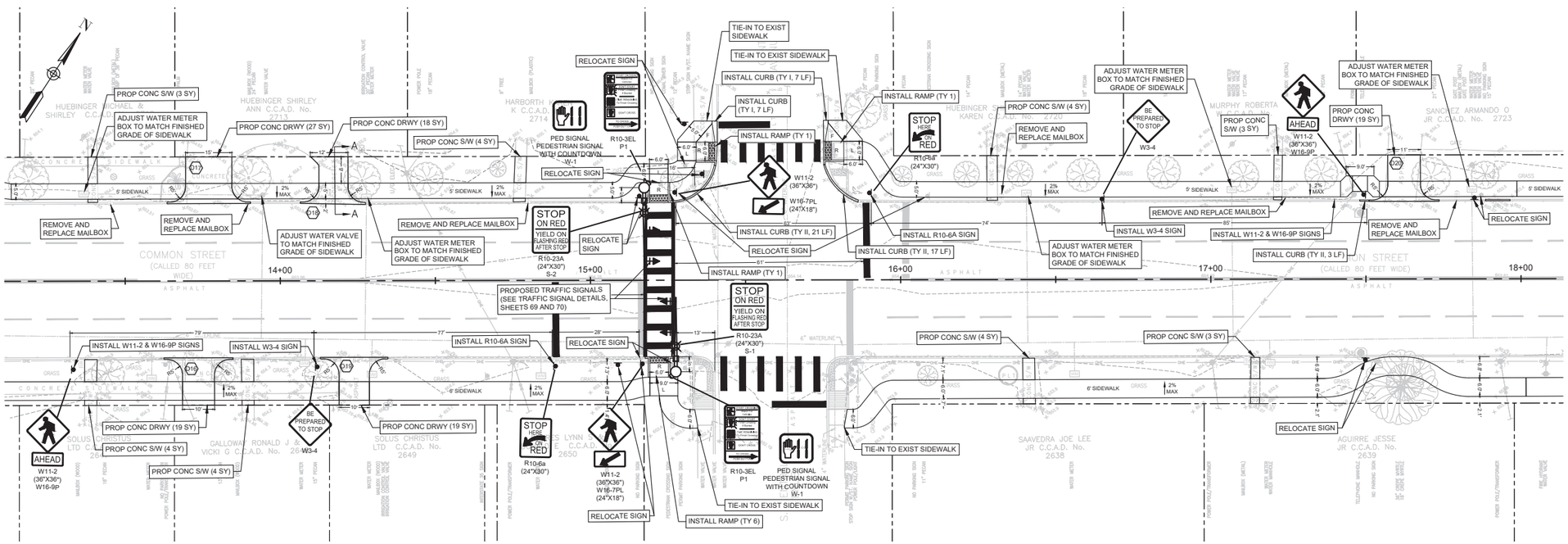

SIDEWALK - STA. 13+25 TO 18+00

SYMBOL LEGEND:

- BACK FLOW PREVENTER
- "BB" INLET
- BENCHMARK
- BOLLARD / POST
- BRACE POLE
- BUSINESS SIGN (SEE DESCRIPTION)
- BURIED CABLE MARKER
- CLEAN OUT
- CREPE MYRTLE
- ELECTRIC JUNCTION BOX
- FIRE HYDRANT
- GUY ANCHOR
- COMMUNICATIONS HANDHOLE
- HISTORICAL MARKER
- IRRIGATION CONTROL VALVE
- FOUND IRON ROD / NAIL / "X" (SEE DESCRIPTION)
- MAILBOX
- POLE
- POWER POLE
- POWER POLE W/ CONDUIT
- POWER POLE W/ LIGHT
- POWER POLE W/ TRANSFORMER
- PIPE RISER
- SANITARY MANHOLE
- TELEPHONE MANHOLE
- SIGN (SEE DESCRIPTION)
- SIGN DOUBLE POST
- LIGHT POLE
- STORM MANHOLE
- TELEPHONE PEDESTAL
- TRAFFIC CONTROL BOX
- TRAFFIC SIGNAL POLE
- TRAFFIC PULL BOX
- TRAVERSE
- TREE (SEE DESCRIPTION)
- PALM
- TELEVISION PEDESTAL
- WATER MANHOLE
- WATER METER
- WATER VALVE
- YARD_LIGHT
- CURB RAMP
- PAVERS
- RIGHT-OF-WAY
- CHAINLINK FENCE
- CONCRETE / GUARDRAIL / BARRIER
- OVERHEAD ELECTRIC
- OVERHEAD TRAFFIC SIGNAL
- WOOD FENCE
- WROUGHT IRON FENCE

ABBREVIATIONS LEGEND:

C.C.A.D.	COMAL COUNTY APPRAISAL DISTRICT
CMP	CORRUGATED METAL PIPE
COMM	COMMUNICATION
CONC	CONCRETE
ELEC	ELECTRIC
FL	FLOWLINE
FND	FOUND
G / GUT	GUTTER
IR	IRON ROD
LND	LANDSCAPED
No.	NUMBER
(NFV)	NOT FIELD VERIFIED
OHE	OVERHEAD ELECTRIC
PLT	PLANTER
PVC	POLYVINYL CHLORIDE PIPE
(R)	PER RECORD DRAWING
RCP	REINFORCED CONCRETE PIPE
SAN	SANITARY SEWER
STM	STORM SEWER
S/W	SIDEWALK
TC	TOP OF CURB
(TYP)	TYPICAL
U/G	UNDERGROUND
WCS	WITH CAP STAMPED
W.I.	WROUGHT IRON
W/	WITH
WTR	WATERLINE

PROPOSED LEGEND

- D47 — PROPOSED DRIVEWAY NUMBER
- D51 — PROPOSED DRIVEWAY NUMBER WITH CROSS SLOPE >5%
- R — RAMP
- F — FLARE
- L — LANDING

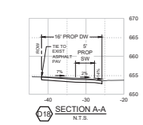

NOTES:

1. EXISTING GROUND CONDITIONS ARE SUCH THAT STORM RUNOFF SHEET FLOWS FROM RESIDENTIAL PROPERTIES TO COMMON ST AND THEN GENERALLY TO THE COMAL RIVER ON THE WESTERN SIDE OF THE PROJECT AND TO THE GUADALUPE RIVER ON THE EASTERN SIDE OF THE PROJECT.
2. EXISTING DRAINAGE TO REMAIN UNCHANGED. PROPOSED SIDEWALK SHALL NOT IMPEDE SURFACE RUNOFF NOR CREATE PONDING AT ANY POINT ALONG PROPOSED ALIGNMENT.
3. CONTRACTOR IS RESPONSIBLE FOR SELECTING ACTUAL ENTRANCE/EXIT LOCATIONS AND MAKING PROPER ARRANGEMENTS TO AVOID UTILITY, FACILITY AND TRAFFIC CONFLICTS AS REQUIRED. CRANE MAT OR SIMILAR DEVICES SHALL BE USED AS NEEDED.
4. CONTRACTOR SHALL TAKE PROPER PRECAUTIONS TO AVOID TRACKING SOIL & DEBRIS ONTO ROADWAY AND IS RESPONSIBLE FOR REMOVING ANY SOIL & DEBRIS INCIDENTAL TO CONSTRUCTION FROM ROADWAY AS SOON AS PRACTICABLE.
5. CONTRACTOR IS RESPONSIBLE FOR LOCATING AND UTILIZING CONCRETE WASHOUT AREA/CONTAINMENT DURING CONSTRUCTION.
6. INLET PROTECTION BARRIERS (SAND TUBE, SILT SACK OR SIMILAR) SHALL BE USED ON HARD SURFACES (E.G. CONCRETE DITCH EMBANKMENT AND ROADWAYS) WHERE SILT FENCE CANNOT BE INSTALLED. EXISTING CURB INLETS ADJACENT AND DOWNSTREAM TO THE PROJECT SHALL BE PROTECTED, INCLUDING THOSE ACROSS THE STREET. NOT ALL INLETS ARE SHOWN ON PLAN.
7. CONTRACTOR SHALL MINIMIZE DISTURBANCE OF EXISTING SURFACE DUE TO CONSTRUCTION WORK, MATERIAL STORAGE AND TRANSPORTATION OF MATERIAL AND EQUIPMENT. CONTRACTOR IS RESPONSIBLE FOR RESURFACING DISTURBED AREAS TO MATCH EXISTING CONDITIONS OR MAKE IT BETTER.
8. NO WORK THAT COULD HAVE AN IMPACT TO THE EXISTING FEMA 100YR WSEL IS BEING PROPOSED FOR THIS PROJECT.
9. FPA NOTIFICATION FOR COMAL COUNTY/CITY WAS SUBMITTED IN WRITING ON 11/29/23.

0 20 40 Feet

REV	DESCRIPTION	DATE	APPR
0	ISSUED FOR BID	02/12/24	AG

SIDEWALK PLAN 2

COMMON STREET PEDESTRIAN IMPROVEMENTS

CITY OF NEW BRAUNFELS
550 Landa Street | New Braunfels, TX 78130

DESIGN BY: KM
DRAWN BY: EFC
CHECKED BY: JB
APPROVED BY: AG

City of New Braunfels

ENGINEER:
THE GOODMAN CORPORATION
3200 TRAVIS, SUITE 200
HOUSTON, TEXAS 77006
www.TheGoodmanCorp.com
(713) 951-7951
TBPELS Firm Registration No. 19990

SURVEYOR:
MBCO ENGINEERING + SURVEYING

STATE OF TEXAS
ASHISH GHOSH
111103
LICENSED
PROFESSIONAL ENGINEER
2/13/2024

DATE: 02/12/2024
SCALE: AS NOTED

SHEET NUMBER
39 OF 97

W:\00_TGC Project Files\NBR100\CAD\NBR100_SW_PLAN.dwg, 2/12/2024

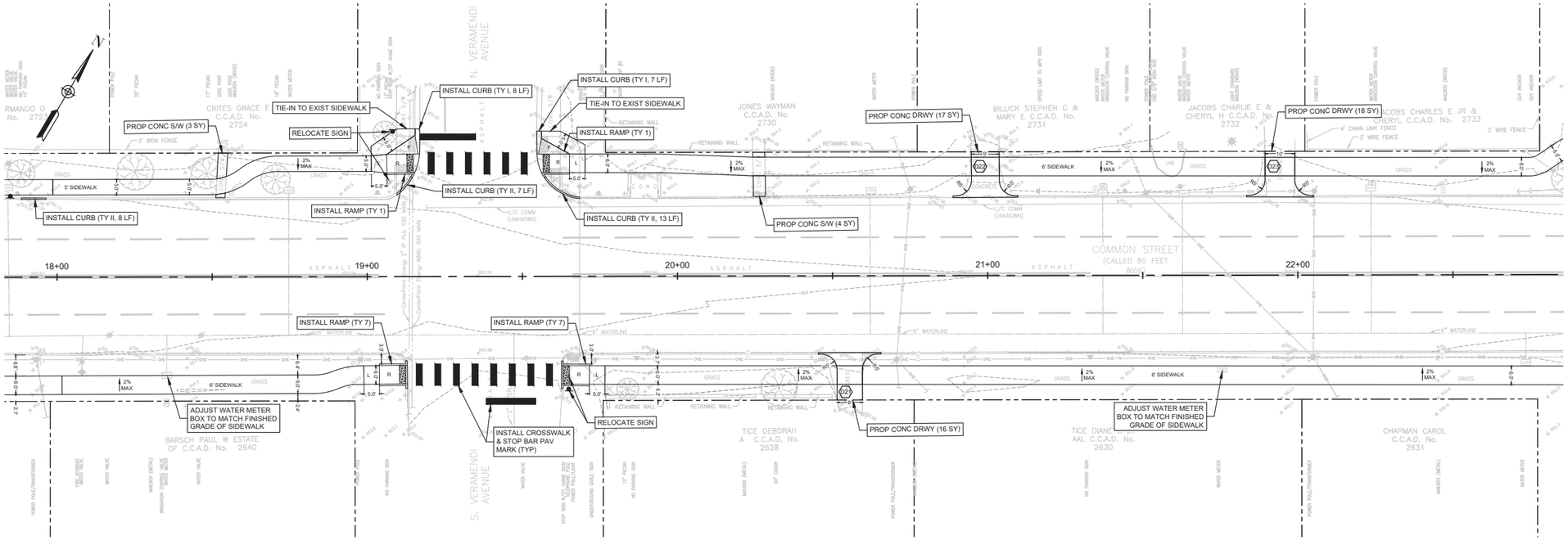

SIDEWALK - STA. 18+00 TO 22+70

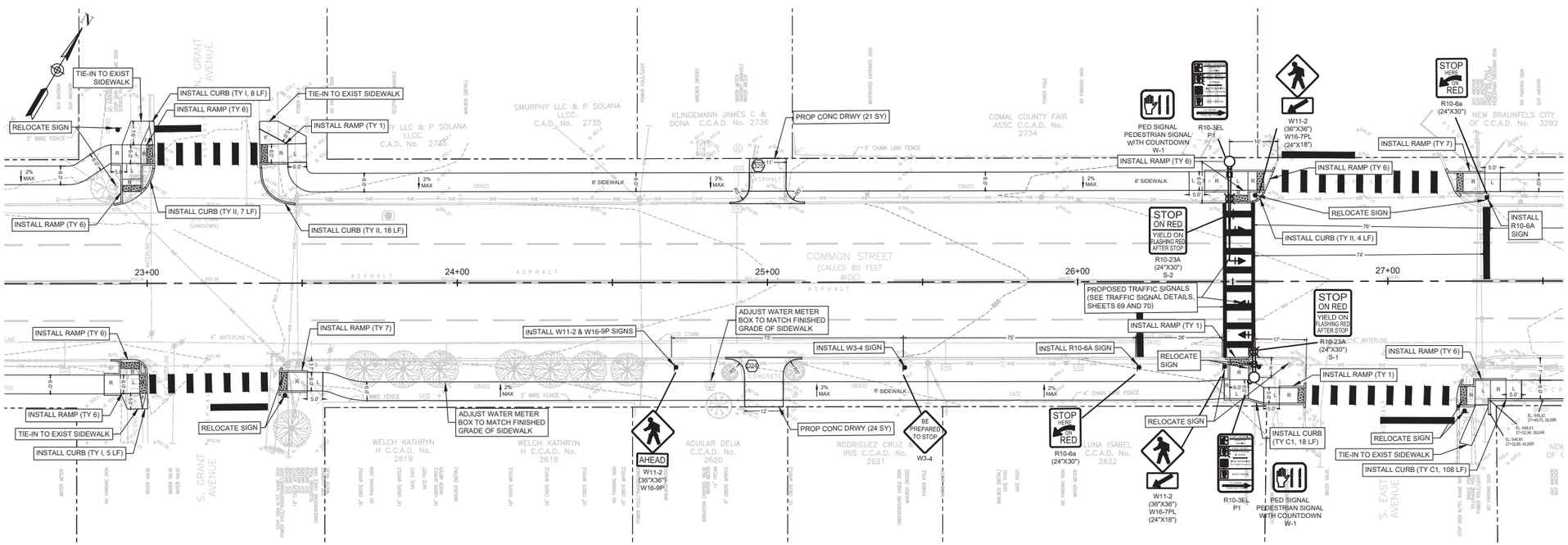

SIDEWALK - STA. 22+70 TO 27+40

SYMBOL LEGEND:

- BACK FLOW PREVENTER
- "BB" INLET
- BENCHMARK
- BOLLARD / POST
- BRACE POLE
- BUSINESS SIGN (SEE DESCRIPTION)
- BURIED CABLE MARKER
- CLEAN OUT
- CREPE MYRTLE
- ELECTRIC JUNCTION BOX
- FIRE HYDRANT
- GUY ANCHOR
- COMMUNICATIONS HANDHOLE
- HISTORICAL MARKER
- IRRIGATION CONTROL VALVE
- FOUND IRON ROD / NAIL / "X" (SEE DESCRIPTION)
- MAILBOX
- POLE
- POWER POLE
- POWER POLE W/ CONDUIT
- POWER POLE W/ LIGHT
- POWER POLE W/ TRANSFORMER
- PIPE RISER
- SANITARY MANHOLE
- TELEPHONE MANHOLE
- SIGN (SEE DESCRIPTION)
- SIGN DOUBLE POST
- LIGHT POLE
- STORM MANHOLE
- TELEPHONE PEDESTAL
- TRAFFIC CONTROL BOX
- TRAFFIC SIGNAL POLE
- TRAFFIC PULL BOX
- TRAVERSE
- TREE (SEE DESCRIPTION)
- PALM
- TELEVISION PEDESTAL
- WATER MANHOLE
- WATER METER
- WATER VALVE
- YARD_LIGHT
- CURB RAMP
- PAVERS
- RIGHT-OF-WAY
- CHAINLINK FENCE
- CONCRETE / GUARDRAIL / BARRIER
- OVERHEAD ELECTRIC
- OVERHEAD TRAFFIC SIGNAL
- WOOD FENCE
- WROUGHT IRON FENCE

ABBREVIATIONS LEGEND:

C.C.A.D.	COMAL COUNTY APPRAISAL DISTRICT
CMP	CORRUGATED METAL PIPE
COMM	COMMUNICATION
CONC	CONCRETE
ELEC	ELECTRIC
FL	FLOWLINE
FND	FOUND
G / GUT	GUTTER
IR	IRON ROD
LND	LANDSCAPED
No.	NUMBER
(NFV)	NOT FIELD VERIFIED
OHE	OVERHEAD ELECTRIC
PLT	PLANTER
PVC	POLYVINYL CHLORIDE PIPE
(R)	PER RECORD DRAWING
RCP	REINFORCED CONCRETE PIPE
SAN	SANITARY SEWER
STM	STORM SEWER
S/W	SIDEWALK
TC	TOP OF CURB
(TYP)	TYPICAL
U/G	UNDERGROUND
WCS	WITH CAP STAMPED
W.I.	WROUGHT IRON
W/	WITH
WTR	WATERLINE

PROPOSED LEGEND

- D47 — PROPOSED DRIVEWAY NUMBER
- D51 — PROPOSED DRIVEWAY NUMBER WITH CROSS SLOPE >5%
- R — RAMP
- F — FLARE
- L — LANDING

NOTES:

1. EXISTING GROUND CONDITIONS ARE SUCH THAT STORM RUNOFF SHEET FLOWS FROM RESIDENTIAL PROPERTIES TO COMMON ST AND THEN GENERALLY TO THE COMAL RIVER ON THE WESTERN SIDE OF THE PROJECT AND TO THE GUADALUPE RIVER ON THE EASTERN SIDE OF THE PROJECT.
2. EXISTING DRAINAGE TO REMAIN UNCHANGED. PROPOSED SIDEWALK SHALL NOT IMPEDE SURFACE RUNOFF NOR CREATE PONDING AT ANY POINT ALONG PROPOSED ALIGNMENT.
3. CONTRACTOR IS RESPONSIBLE FOR SELECTING ACTUAL ENTRANCE/EXIT LOCATIONS AND MAKING PROPER ARRANGEMENTS TO AVOID UTILITY, FACILITY AND TRAFFIC CONFLICTS AS REQUIRED. CRANE MAT OR SIMILAR DEVICES SHALL BE USED AS NEEDED.
4. CONTRACTOR SHALL TAKE PROPER PRECAUTIONS TO AVOID TRACKING SOIL & DEBRIS ONTO ROADWAY AND IS RESPONSIBLE FOR REMOVING ANY SOIL & DEBRIS INCIDENTAL TO CONSTRUCTION FROM ROADWAY AS SOON AS PRACTICABLE.
5. CONTRACTOR IS RESPONSIBLE FOR LOCATING AND UTILIZING CONCRETE WASHOUT AREA/CONTAINMENT DURING CONSTRUCTION.
6. INLET PROTECTION BARRIERS (SAND TUBE, SILT SACK OR SIMILAR) SHALL BE USED ON HARD SURFACES (E.G. CONCRETE DITCH EMBANKMENT AND ROADWAYS) WHERE SILT FENCE CANNOT BE INSTALLED. EXISTING CURB INLETS ADJACENT AND DOWNSTREAM TO THE PROJECT SHALL BE PROTECTED, INCLUDING THOSE ACROSS THE STREET. NOT ALL INLETS ARE SHOWN ON PLAN.
7. CONTRACTOR SHALL MINIMIZE DISTURBANCE OF EXISTING SURFACE DUE TO CONSTRUCTION WORK, MATERIAL STORAGE AND TRANSPORTATION OF MATERIAL AND EQUIPMENT. CONTRACTOR IS RESPONSIBLE FOR RESURFACING DISTURBED AREAS TO MATCH EXISTING CONDITIONS OR MAKE IT BETTER.
8. NO WORK THAT COULD HAVE AN IMPACT TO THE EXISTING FEMA 100YR WSEL IS BEING PROPOSED FOR THIS PROJECT.
9. FPA NOTIFICATION FOR COMAL COUNTY/CITY WAS SUBMITTED IN WRITING ON 11/29/23.

0 20 40 Feet

REV	DESCRIPTION	DATE	APPR
0	ISSUED FOR BID	02/12/24	AG

SIDEWALK PLAN 3

COMMON STREET PEDESTRIAN IMPROVEMENTS

CITY OF NEW BRAUNFELS
550 Landa Street | New Braunfels, TX 78130

DESIGN BY: KM
DRAWN BY: EFC
CHECKED BY: JB
APPROVED BY: AG

City of New Braunfels

ENGINEER:
THE GOODMAN CORPORATION
3200 TRAVIS, SUITE 200
HOUSTON, TEXAS 77006
www.TheGoodmanCorp.com
(713) 951-7951
TBPELS Firm Registration No. 19990

SURVEYOR:
MBCO ENGINEERING + SURVEYING

STATE OF TEXAS
ASHISH GHOSH
111103
LICENSED
PROFESSIONAL ENGINEER
02/13/2024

DATE: 02/12/2024
SCALE: AS NOTED

SHEET NUMBER
40 OF 97

W:\00_TGC Project Files\NBR100\CAD\NBR100_SW_PLAN.dwg, 2/12/2024

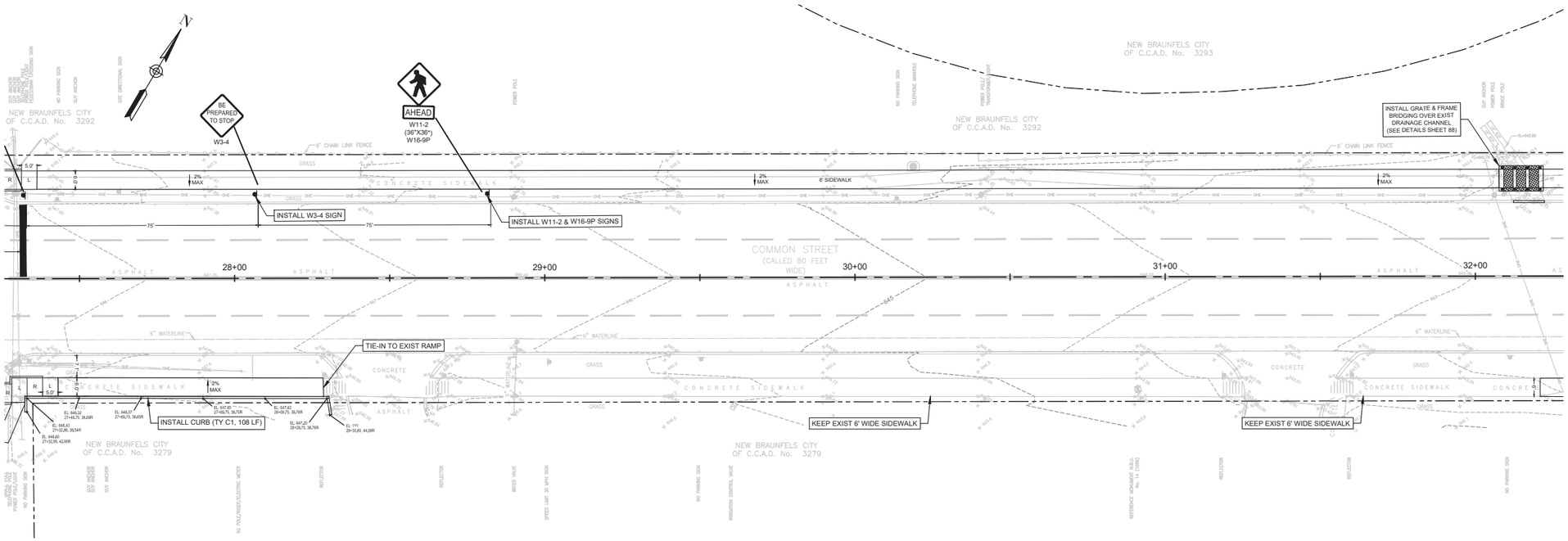

SIDEWALK - STA. 27+40 TO 32+10

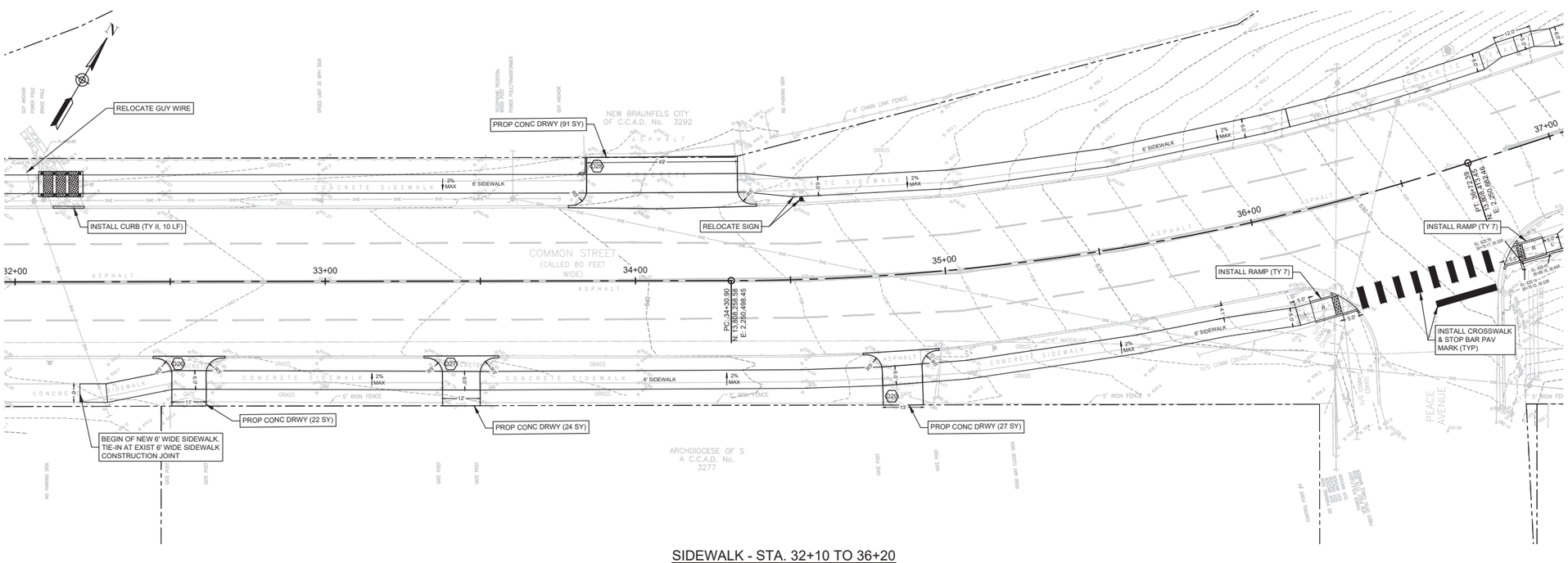

SIDEWALK - STA. 32+10 TO 36+20

SYMBOL LEGEND:

- BACK FLOW PREVENTER
- "BB" INLET
- BENCHMARK
- BOLLARD / POST
- BRACE POLE
- BUSINESS SIGN (SEE DESCRIPTION)
- BURIED CABLE MARKER
- CLEAN OUT
- CREPE MYRTLE
- ELECTRIC JUNCTION BOX
- FIRE HYDRANT
- GUY ANCHOR
- COMMUNICATIONS HANDHOLE
- HISTORICAL MARKER
- IRRIGATION CONTROL VALVE
- FOUND IRON ROD / NAIL / "X" (SEE DESCRIPTION)
- MAILBOX
- POLE
- POWER POLE
- POWER POLE W/ CONDUIT
- POWER POLE W/ LIGHT
- POWER POLE W/ TRANSFORMER
- PIPE RISER
- SANITARY MANHOLE
- TELEPHONE MANHOLE
- SIGN (SEE DESCRIPTION)
- SIGN DOUBLE POST
- LIGHT POLE
- STORM MANHOLE
- TELEPHONE PEDESTAL
- TRAFFIC CONTROL BOX
- TRAFFIC SIGNAL POLE
- TRAFFIC PULL BOX
- TRAVERSE
- TREE (SEE DESCRIPTION)
- PALM
- TELEVISION PEDESTAL
- WATER MANHOLE
- WATER METER
- WATER VALVE
- YARD_LIGHT
- CURB RAMP
- PAVERS
- RIGHT-OF-WAY
- CHAINLINK FENCE
- CONCRETE / GUARDRAIL / BARRIER
- OVERHEAD ELECTRIC
- OVERHEAD TRAFFIC SIGNAL
- WOOD FENCE
- WROUGHT IRON FENCE

ABBREVIATIONS LEGEND:

C.C.A.D.	COMAL COUNTY APPRAISAL DISTRICT
CMP	CORRUGATED METAL PIPE
COMM	COMMUNICATION
CONC	CONCRETE
ELEC	ELECTRIC
FL	FLOWLINE
FND	FOUND
G / GUT	GUTTER
IR	IRON ROD
LND	LANDSCAPED
No.	NUMBER
(NFV)	NOT FIELD VERIFIED
OHE	OVERHEAD ELECTRIC
PLT	PLANTER
PVC	POLYVINYL CHLORIDE PIPE
(R)	PER RECORD DRAWING
RCP	REINFORCED CONCRETE PIPE
SAN	SANITARY SEWER
STM	STORM SEWER
S/W	SIDEWALK
TC	TOP OF CURB
(TYP)	TYPICAL
U/G	UNDERGROUND
WCS	WITH CAP STAMPED
W.I.	WROUGHT IRON
W/	WITH
WTR	WATERLINE

PROPOSED LEGEND

- D47 — PROPOSED DRIVEWAY NUMBER
- D51 — PROPOSED DRIVEWAY NUMBER WITH CROSS SLOPE >5%
- R — RAMP
- F — FLARE
- L — LANDING

NOTES:

1. EXISTING GROUND CONDITIONS ARE SUCH THAT STORM RUNOFF SHEET FLOWS FROM RESIDENTIAL PROPERTIES TO COMMON ST AND THEN GENERALLY TO THE COMAL RIVER ON THE WESTERN SIDE OF THE PROJECT AND TO THE GUADALUPE RIVER ON THE EASTERN SIDE OF THE PROJECT.
2. EXISTING DRAINAGE TO REMAIN UNCHANGED. PROPOSED SIDEWALK SHALL NOT IMPEDE SURFACE RUNOFF NOR CREATE PONDING AT ANY POINT ALONG PROPOSED ALIGNMENT.
3. CONTRACTOR IS RESPONSIBLE FOR SELECTING ACTUAL ENTRANCE/EXIT LOCATIONS AND MAKING PROPER ARRANGEMENTS TO AVOID UTILITY, FACILITY AND TRAFFIC CONFLICTS AS REQUIRED. CRANE MAT OR SIMILAR DEVICES SHALL BE USED AS NEEDED.
4. CONTRACTOR SHALL TAKE PROPER PRECAUTIONS TO AVOID TRACKING SOIL & DEBRIS ONTO ROADWAY AND IS RESPONSIBLE FOR REMOVING ANY SOIL & DEBRIS INCIDENTAL TO CONSTRUCTION FROM ROADWAY AS SOON AS PRACTICABLE.
5. CONTRACTOR IS RESPONSIBLE FOR LOCATING AND UTILIZING CONCRETE WASHOUT AREA/CONTAINMENT DURING CONSTRUCTION.
6. INLET PROTECTION BARRIERS (SAND TUBE, SILT SACK OR SIMILAR) SHALL BE USED ON HARD SURFACES (E.G. CONCRETE DITCH EMBANKMENT AND ROADWAYS) WHERE SILT FENCE CANNOT BE INSTALLED. EXISTING CURB INLETS ADJACENT AND DOWNSTREAM TO THE PROJECT SHALL BE PROTECTED, INCLUDING THOSE ACROSS THE STREET. NOT ALL INLETS ARE SHOWN ON PLAN.
7. CONTRACTOR SHALL MINIMIZE DISTURBANCE OF EXISTING SURFACE DUE TO CONSTRUCTION WORK, MATERIAL STORAGE AND TRANSPORTATION OF MATERIAL AND EQUIPMENT. CONTRACTOR IS RESPONSIBLE FOR RESURFACING DISTURBED AREAS TO MATCH EXISTING CONDITIONS OR MAKE IT BETTER.
8. NO WORK THAT COULD HAVE AN IMPACT TO THE EXISTING FEMA 100YR WSEL IS BEING PROPOSED FOR THIS PROJECT.
9. FPA NOTIFICATION FOR COMAL COUNTY/CITY WAS SUBMITTED IN WRITING ON 11/29/23.

0 20 40 Feet

REV	DESCRIPTION	DATE	APPR
0	ISSUED FOR BID	02/12/24	AG

SIDEWALK PLAN 4

COMMON STREET PEDESTRIAN IMPROVEMENTS

CITY OF NEW BRAUNFELS
550 Landa Street | New Braunfels, TX 78130

DESIGN BY: KM
DRAWN BY: EFC
CHECKED BY: JB
APPROVED BY: AG

City of New Braunfels

ENGINEER:
THE GOODMAN CORPORATION
3200 TRAVIS, SUITE 200
HOUSTON, TEXAS 77006
www.TheGoodmanCorp.com
(713) 951-7951
TBPELS Firm Registration No. 19990

SURVEYOR:
MBCO ENGINEERING + SURVEYING

STATE OF TEXAS
ASHISH GHOSH
111103
LICENSED
PROFESSIONAL ENGINEER
2/13/2024

DATE: 02/12/2024
SCALE: AS NOTED

SHEET NUMBER
41 OF 97

W:\00_TGC Project Files\MBR100\CAD\MBR100_SW_PLAN.dwg, 2/12/2024

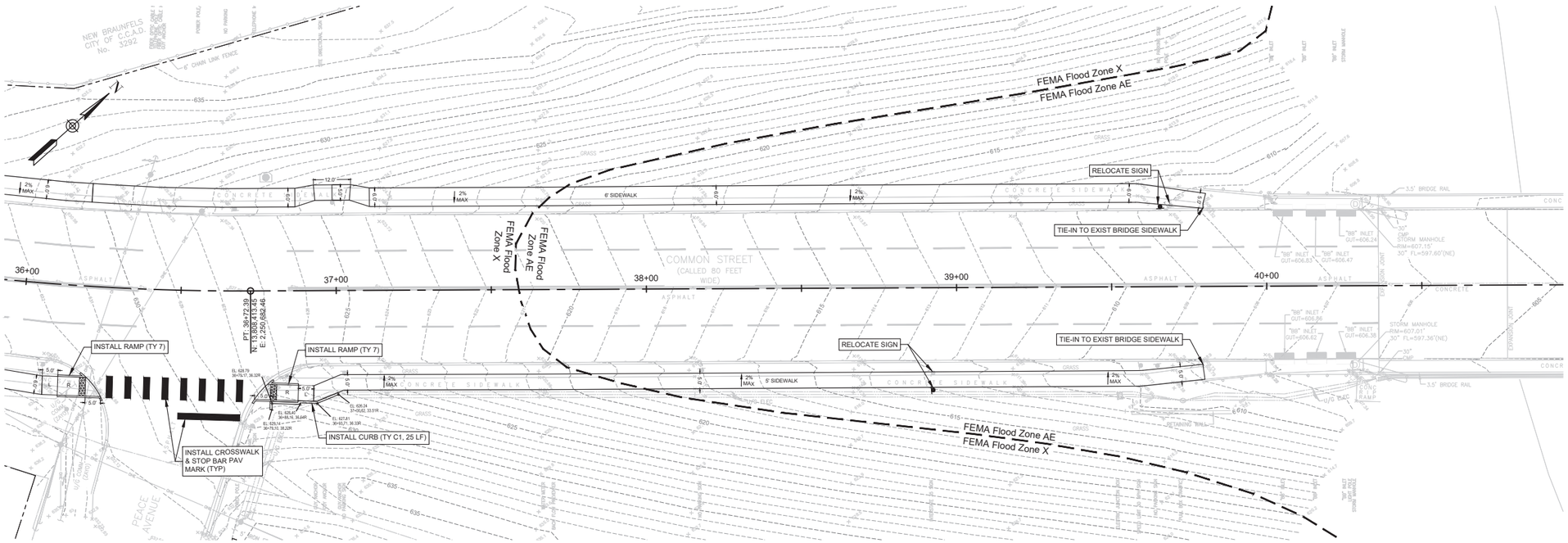

SIDEWALK - STA. 36+20 TO 40+80

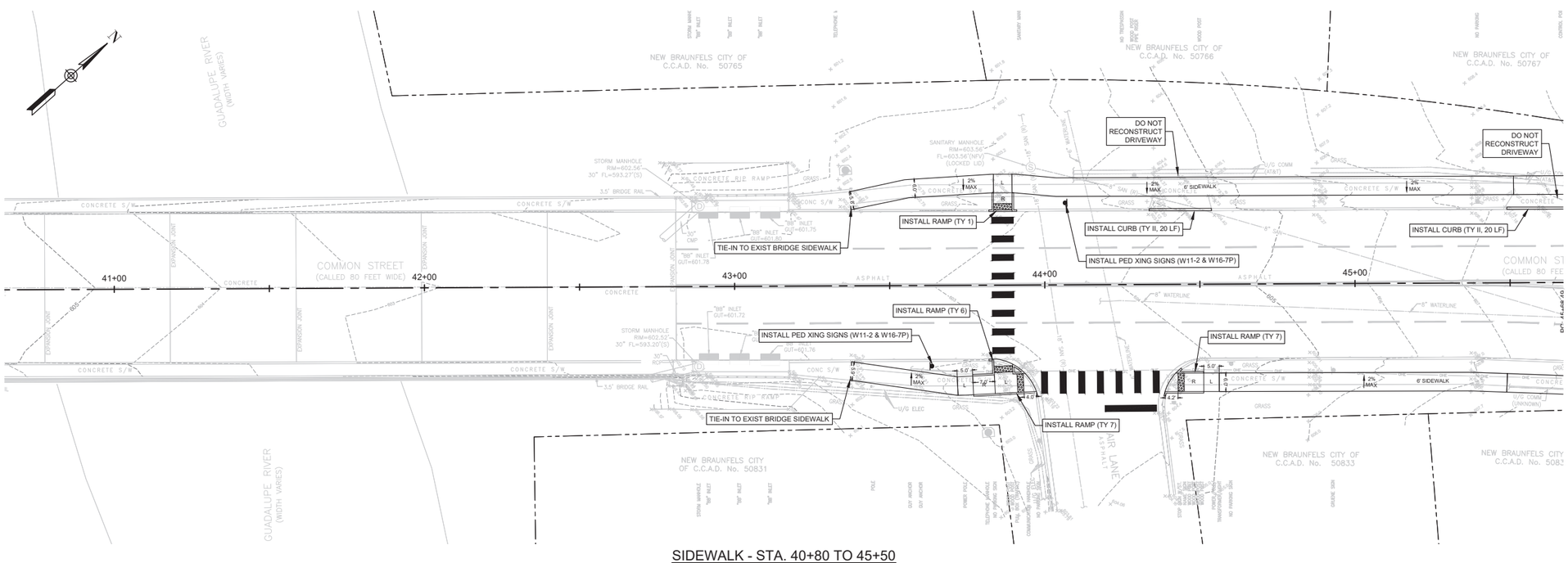

SIDEWALK - STA. 40+80 TO 45+50

SYMBOL LEGEND:

- BACK FLOW PREVENTER
- "BB" INLET
- BENCHMARK
- BOLLARD / POST
- BRACE POLE
- BUSINESS SIGN (SEE DESCRIPTION)
- BURIED CABLE MARKER
- CLEAN OUT
- CREPE MYRTLE
- ELECTRIC JUNCTION BOX
- FIRE HYDRANT
- GUY ANCHOR
- COMMUNICATIONS HANDHOLE
- HISTORICAL MARKER
- IRRIGATION CONTROL VALVE
- FOUND IRON ROD / NAIL / "X" (SEE DESCRIPTION)
- MAILBOX
- POLE
- POWER POLE
- POWER POLE W/ CONDUIT
- POWER POLE W/ LIGHT
- POWER POLE W/ TRANSFORMER
- PIPE RISER
- SANITARY MANHOLE
- TELEPHONE MANHOLE
- SIGN (SEE DESCRIPTION)
- SIGN DOUBLE POST
- LIGHT POLE
- STORM MANHOLE
- TELEPHONE PEDESTAL
- TRAFFIC CONTROL BOX
- TRAFFIC SIGNAL POLE
- TRAFFIC PULL BOX
- TRAVERSE
- TREE (SEE DESCRIPTION)
- PALM
- TELEVISION PEDESTAL
- WATER MANHOLE
- WATER METER
- WATER VALVE
- YARD_LIGHT
- CURB RAMP
- PAVERS
- RIGHT-OF-WAY
- CHAINLINK FENCE
- CONCRETE / GUARDRAIL / BARRIER
- OVERHEAD ELECTRIC
- OVERHEAD TRAFFIC SIGNAL
- WOOD FENCE
- WROUGHT IRON FENCE

ABBREVIATIONS LEGEND:

C.C.A.D.	COMAL COUNTY APPRAISAL DISTRICT
CMP	CORRUGATED METAL PIPE
COMM	COMMUNICATION
CONC	CONCRETE
ELEC	ELECTRIC
FL	FLOWLINE
FND	FOUND
G / GUT	GUTTER
IR	IRON ROD
LND	LANDSCAPED
No.	NUMBER
(NFV)	NOT FIELD VERIFIED
OHE	OVERHEAD ELECTRIC
PLT	PLANTER
PVC	POLYVINYL CHLORIDE PIPE
(R)	PER RECORD DRAWING
RCP	REINFORCED CONCRETE PIPE
SAN	SANITARY SEWER
STM	STORM SEWER
S/W	SIDEWALK
TC	TOP OF CURB
(TYP)	TYPICAL
U/G	UNDERGROUND
WCS	WITH CAP STAMPED
W.I.	WROUGHT IRON
W/	WITH
WTR	WATERLINE

PROPOSED LEGEND

- D47 — PROPOSED DRIVEWAY NUMBER
- D51 — PROPOSED DRIVEWAY NUMBER WITH CROSS SLOPE >5%
- R — RAMP
- F — FLARE
- L — LANDING

NOTES:

1. EXISTING GROUND CONDITIONS ARE SUCH THAT STORM RUNOFF SHEET FLOWS FROM RESIDENTIAL PROPERTIES TO COMMON ST AND THEN GENERALLY TO THE COMAL RIVER ON THE WESTERN SIDE OF THE PROJECT AND TO THE GUADALUPE RIVER ON THE EASTERN SIDE OF THE PROJECT.
2. EXISTING DRAINAGE TO REMAIN UNCHANGED. PROPOSED SIDEWALK SHALL NOT IMPEDE SURFACE RUNOFF NOR CREATE PONDING AT ANY POINT ALONG PROPOSED ALIGNMENT.
3. CONTRACTOR IS RESPONSIBLE FOR SELECTING ACTUAL ENTRANCE/EXIT LOCATIONS AND MAKING PROPER ARRANGEMENTS TO AVOID UTILITY, FACILITY AND TRAFFIC CONFLICTS AS REQUIRED. CRANE MAT OR SIMILAR DEVICES SHALL BE USED AS NEEDED.
4. CONTRACTOR SHALL TAKE PROPER PRECAUTIONS TO AVOID TRACKING SOIL & DEBRIS ONTO ROADWAY AND IS RESPONSIBLE FOR REMOVING ANY SOIL & DEBRIS INCIDENTAL TO CONSTRUCTION FROM ROADWAY AS SOON AS PRACTICABLE.
5. CONTRACTOR IS RESPONSIBLE FOR LOCATING AND UTILIZING CONCRETE WASHOUT AREA/CONTAINMENT DURING CONSTRUCTION.
6. INLET PROTECTION BARRIERS (SAND TUBE, SILT SACK OR SIMILAR) SHALL BE USED ON HARD SURFACES (E.G. CONCRETE DITCH EMBANKMENT AND ROADWAYS) WHERE SILT FENCE CANNOT BE INSTALLED. EXISTING CURB INLETS ADJACENT AND DOWNSTREAM TO THE PROJECT SHALL BE PROTECTED, INCLUDING THOSE ACROSS THE STREET. NOT ALL INLETS ARE SHOWN ON PLAN.
7. CONTRACTOR SHALL MINIMIZE DISTURBANCE OF EXISTING SURFACE DUE TO CONSTRUCTION WORK, MATERIAL STORAGE AND TRANSPORTATION OF MATERIAL AND EQUIPMENT. CONTRACTOR IS RESPONSIBLE FOR RESURFACING DISTURBED AREAS TO MATCH EXISTING CONDITIONS OR MAKE IT BETTER.
8. NO WORK THAT COULD HAVE AN IMPACT TO THE EXISTING FEMA 100YR WSEL IS BEING PROPOSED FOR THIS PROJECT.
9. FPA NOTIFICATION FOR COMAL COUNTY/CITY WAS SUBMITTED IN WRITING ON 11/29/23.

0 20 40 Feet

REV	DESCRIPTION	DATE	APPR
0	ISSUED FOR BID	02/12/24	AG

SIDEWALK PLAN 5

COMMON STREET PEDESTRIAN IMPROVEMENTS

CITY OF NEW BRAUNFELS
550 Landa Street | New Braunfels, TX 78130

DESIGN BY: KM
DRAWN BY: EFC
CHECKED BY: JB
APPROVED BY: AG

City of New Braunfels

ENGINEER:
THE GOODMAN CORPORATION
3200 TRAVIS, SUITE 200
HOUSTON, TEXAS 77006
www.TheGoodmanCorp.com
(713) 951-7951
TBPELS Firm Registration No. 19990

SURVEYOR:
MBCO ENGINEERING + SURVEYING

STATE OF TEXAS
ASHISH GHOSH
111103
LICENSED
PROFESSIONAL ENGINEER
2/13/2024

DATE: 02/12/2024
SCALE: AS NOTED

W:\00_TGC Project Files\MBR100\CAD\NBR100_SW_PLAN.dwg, 2/12/2024

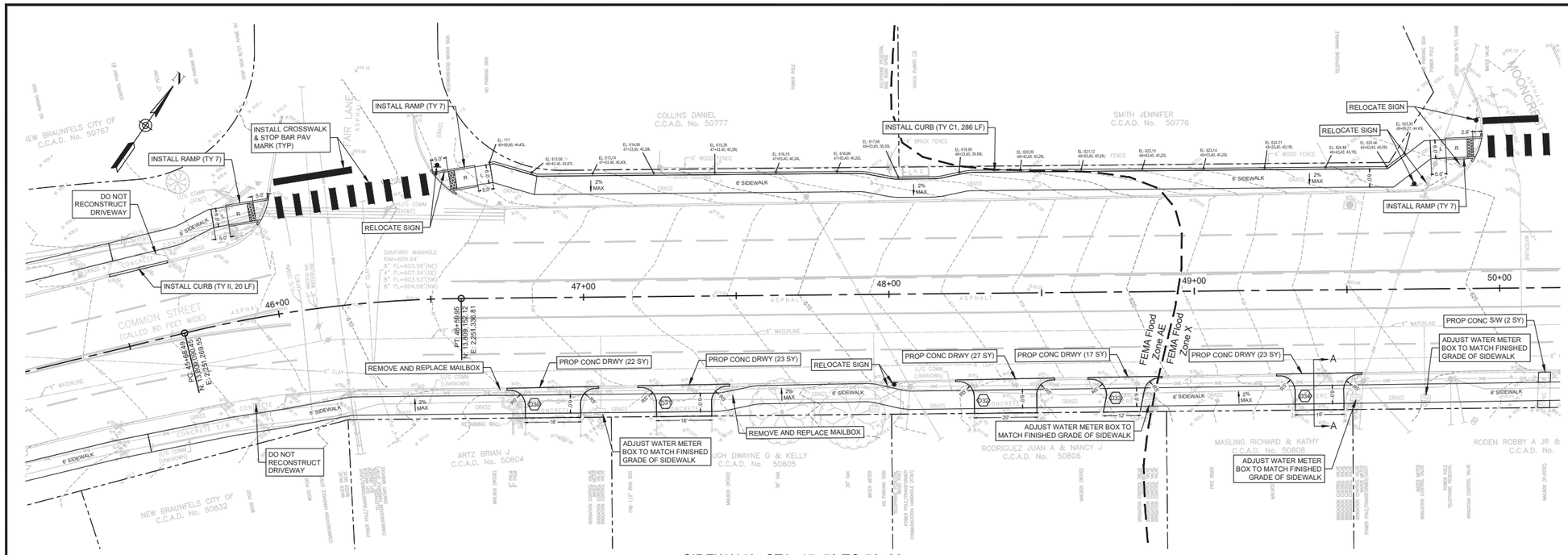

SIDEWALK - STA. 45+50 TO 50+00

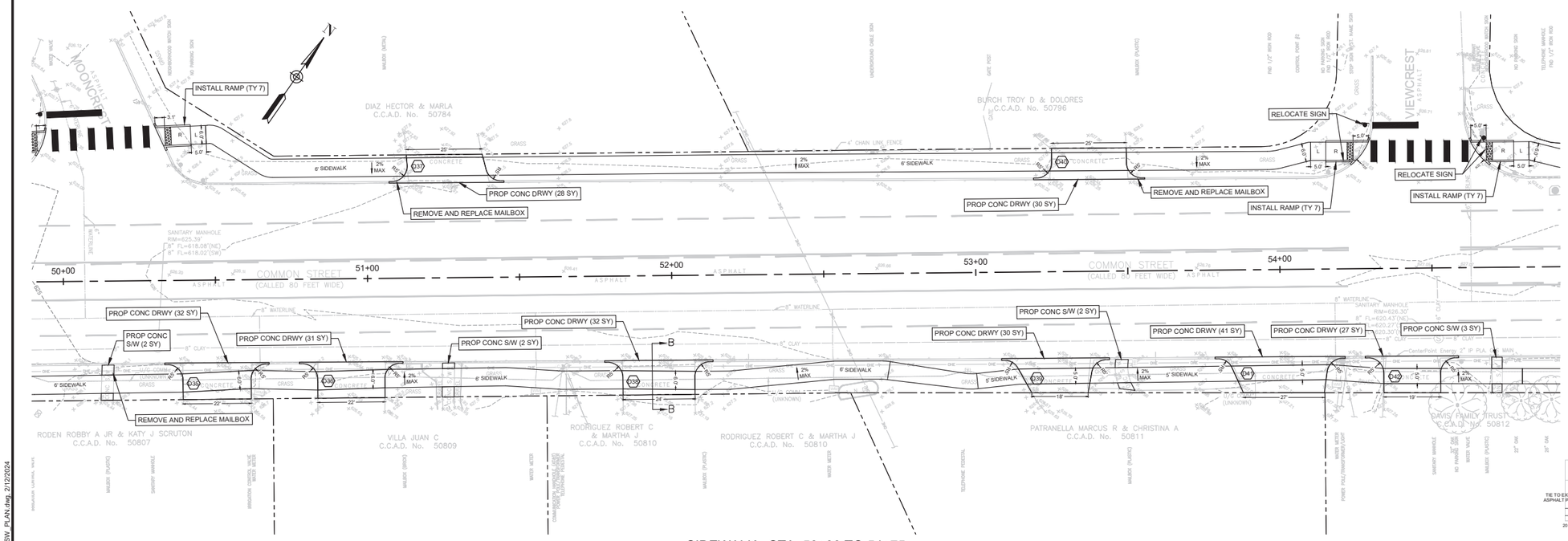

SIDEWALK - STA. 50+00 TO 54+75

SYMBOL LEGEND:

- BACK FLOW PREVENTER
- "BB" INLET
- BENCHMARK
- BOLLARD / POST
- BRACE POLE
- BUSINESS SIGN (SEE DESCRIPTION)
- BURIED CABLE MARKER
- CLEAN OUT
- CREPE MYRTLE
- ELECTRIC JUNCTION BOX
- FIRE HYDRANT
- GUY ANCHOR
- COMMUNICATIONS HANDHOLE
- HISTORICAL MARKER
- IRRIGATION CONTROL VALVE
- FOUND IRON ROD / NAIL / "X" (SEE DESCRIPTION)
- MAILBOX
- POLE
- POWER POLE
- POWER POLE W/ CONDUIT
- POWER POLE W/ LIGHT
- POWER POLE W/ TRANSFORMER
- PIPE RISER
- SANITARY MANHOLE
- TELEPHONE MANHOLE
- SIGN (SEE DESCRIPTION)
- SIGN DOUBLE POST
- LIGHT POLE
- STORM MANHOLE
- TELEPHONE PEDESTAL
- TRAFFIC CONTROL BOX
- TRAFFIC SIGNAL POLE
- TRAFFIC PULL BOX
- TRAVERSE
- TREE (SEE DESCRIPTION)
- PALM
- TELEVISION PEDESTAL
- WATER MANHOLE
- WATER METER
- WATER VALVE
- YARD LIGHT
- CURB RAMP
- PAVERS
- RIGHT-OF-WAY
- CHAINLINK FENCE
- CONCRETE / GUARDRAIL / BARRIER
- OVERHEAD ELECTRIC
- OVERHEAD TRAFFIC SIGNAL
- WOOD FENCE
- WROUGHT IRON FENCE

ABBREVIATIONS LEGEND:

C.C.A.D.	COMAL COUNTY APPRAISAL DISTRICT
CMP	CORRUGATED METAL PIPE
COMM	COMMUNICATION
CONC	CONCRETE
ELEC	ELECTRIC
FL	FLOWLINE
FND	FOUND
G / GUT	GUTTER
IR	IRON ROD
LND	LANDSCAPED
No.	NUMBER
(NFV)	NOT FIELD VERIFIED
OHE	OVERHEAD ELECTRIC
PLT	PLANTER
PVC	POLYVINYL CHLORIDE PIPE
(R)	PER RECORD DRAWING
RCP	REINFORCED CONCRETE PIPE
SAN	SANITARY SEWER
STM	STORM SEWER
S/W	SIDEWALK
TC	TOP OF CURB
(TYP)	TYPICAL
U/G	UNDERGROUND
WCS	WITH CAP STAMPED
W.I.	WROUGHT IRON
W/	WITH
WTR	WATERLINE

PROPOSED LEGEND

- D47 — PROPOSED DRIVEWAY NUMBER
- D51 — PROPOSED DRIVEWAY NUMBER WITH CROSS SLOPE >5%
- R — RAMP
- F — FLARE
- L — LANDING

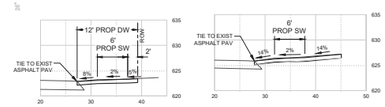

D34 SECTION A-A N.T.S.

D38 SECTION B-B N.T.S.

NOTES:

1. EXISTING GROUND CONDITIONS ARE SUCH THAT STORM RUNOFF SHEET FLOWS FROM RESIDENTIAL PROPERTIES TO COMMON ST AND THEN GENERALLY TO THE COMAL RIVER ON THE WESTERN SIDE OF THE PROJECT AND TO THE GUADALUPE RIVER ON THE EASTERN SIDE OF THE PROJECT.
2. EXISTING DRAINAGE TO REMAIN UNCHANGED. PROPOSED SIDEWALK SHALL NOT IMPEDE SURFACE RUNOFF NOR CREATE PONDING AT ANY POINT ALONG PROPOSED ALIGNMENT.
3. CONTRACTOR IS RESPONSIBLE FOR SELECTING ACTUAL ENTRANCE/EXIT LOCATIONS AND MAKING PROPER ARRANGEMENTS TO AVOID UTILITY, FACILITY AND TRAFFIC CONFLICTS AS REQUIRED. CRANE MAT OR SIMILAR DEVICES SHALL BE USED AS NEEDED.
4. CONTRACTOR SHALL TAKE PROPER PRECAUTIONS TO AVOID TRACKING SOIL & DEBRIS ONTO ROADWAY AND IS RESPONSIBLE FOR REMOVING ANY SOIL & DEBRIS INCIDENTAL TO CONSTRUCTION FROM ROADWAY AS SOON AS PRACTICABLE.
5. CONTRACTOR IS RESPONSIBLE FOR LOCATING AND UTILIZING CONCRETE WASHOUT AREA/CONTAINMENT DURING CONSTRUCTION.
6. INLET PROTECTION BARRIERS (SAND TUBE, SILT SACK OR SIMILAR) SHALL BE USED ON HARD SURFACES (E.G. CONCRETE DITCH EMBANKMENT AND ROADWAYS) WHERE SILT FENCE CANNOT BE INSTALLED. EXISTING CURB INLETS ADJACENT AND DOWNSTREAM TO THE PROJECT SHALL BE PROTECTED, INCLUDING THOSE ACROSS THE STREET. NOT ALL INLETS ARE SHOWN ON PLAN.
7. CONTRACTOR SHALL MINIMIZE DISTURBANCE OF EXISTING SURFACE DUE TO CONSTRUCTION WORK, MATERIAL STORAGE AND TRANSPORTATION OF MATERIAL AND EQUIPMENT. CONTRACTOR IS RESPONSIBLE FOR RESURFACING DISTURBED AREAS TO MATCH EXISTING CONDITIONS OR MAKE IT BETTER.
8. NO WORK THAT COULD HAVE AN IMPACT TO THE EXISTING FEMA 100YR WSEL IS BEING PROPOSED FOR THIS PROJECT.
9. FPA NOTIFICATION FOR COMAL COUNTY/CITY WAS SUBMITTED IN WRITING ON 11/29/23.

0 20 40 Feet

REV	DESCRIPTION	DATE	APPR
0	ISSUED FOR BID	02/12/24	AG

SIDEWALK PLAN 6

COMMON STREET PEDESTRIAN IMPROVEMENTS

CITY OF NEW BRAUNFELS
550 Landa Street | New Braunfels, TX 78130

DESIGN BY: KM
DRAWN BY: EFC
CHECKED BY: JB
APPROVED BY: AG

City of New Braunfels

ENGINEER:
THE GOODMAN CORPORATION
3200 TRAVIS, SUITE 200
HOUSTON, TEXAS 77006
www.TheGoodmanCorp.com
(713) 951-7951
TBPELS Firm Registration No. 19990

SURVEYOR:
MBCO ENGINEERING + SURVEYING

STATE OF TEXAS
ASHISH GHOSH
111103
LICENSED PROFESSIONAL ENGINEER
2/13/2024

DATE: 02/12/2024
SCALE: AS NOTED

SHEET NUMBER
43 OF 97

W:\00_TGC Project Files\BR100\CAD\BR100_SW_PLAN.dwg, 2/12/2024

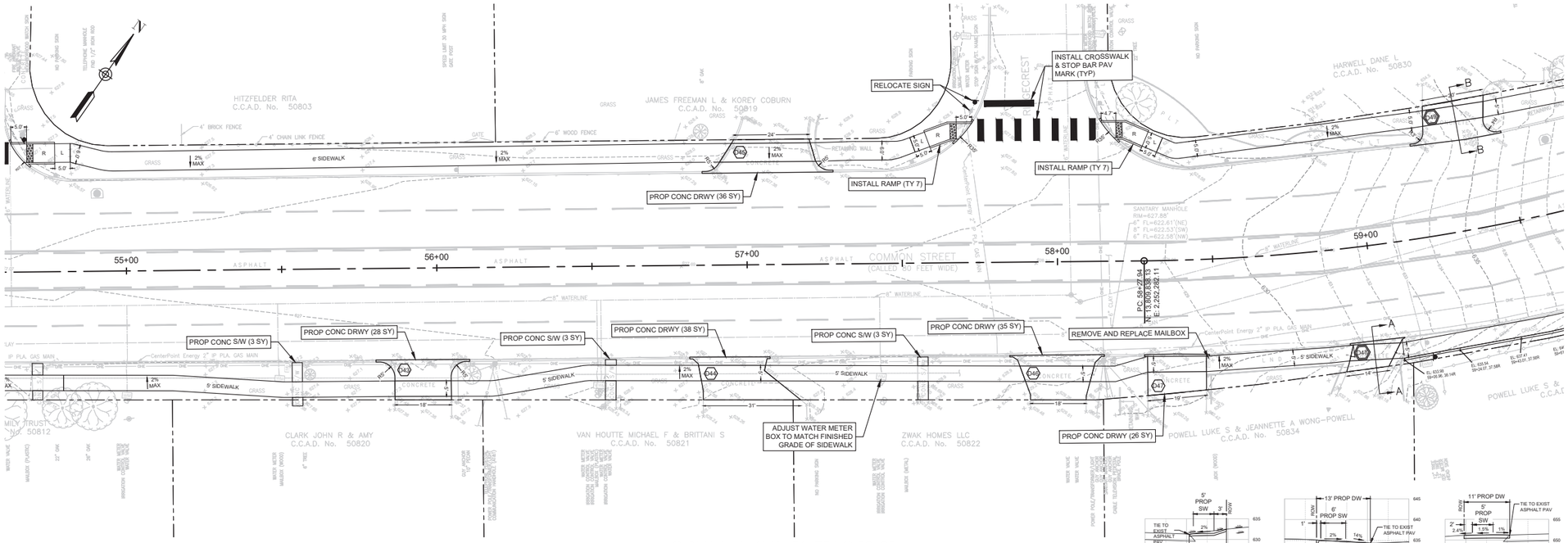

SIDEWALK - STA. 54+75 TO 59+30

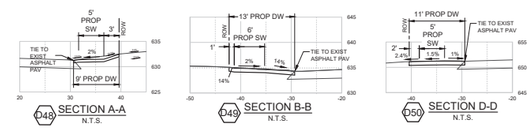

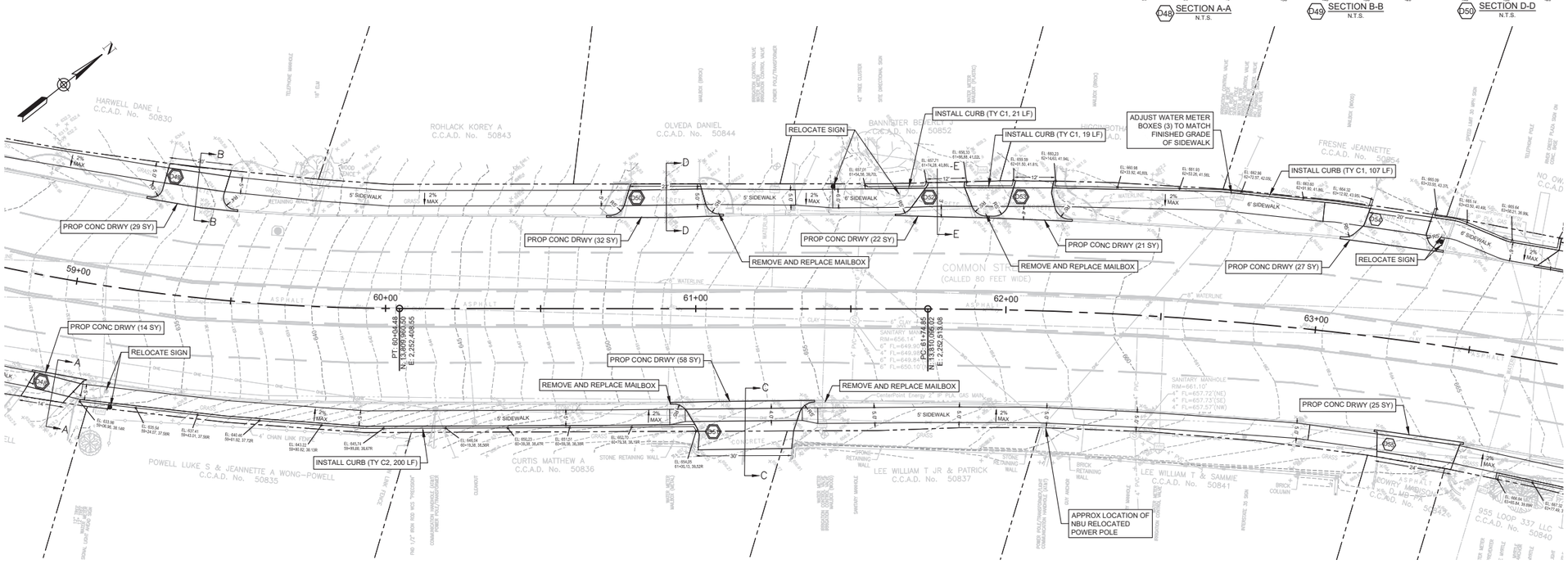

SIDEWALK - STA. 59+30 TO 63+00

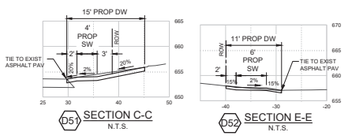

SYMBOL LEGEND:

- BACK FLOW PREVENTER
- "BB" INLET
- BENCHMARK
- BOLLARD / POST
- BRACE POLE
- BUSINESS SIGN (SEE DESCRIPTION)
- BURIED CABLE MARKER
- CLEAN OUT
- CREPE MYRTLE
- ELECTRIC JUNCTION BOX
- FIRE HYDRANT
- GUY ANCHOR
- COMMUNICATIONS HANDHOLE
- HISTORICAL MARKER
- IRRIGATION CONTROL VALVE
- FOUND IRON ROD / NAIL / "X" (SEE DESCRIPTION)
- MAILBOX
- POLE
- POWER POLE
- POWER POLE W/ CONDUIT
- POWER POLE W/ LIGHT
- POWER POLE W/ TRANSFORMER
- PIPE RISER
- SANITARY MANHOLE
- TELEPHONE MANHOLE
- SIGN (SEE DESCRIPTION)
- SIGN DOUBLE POST
- LIGHT POLE
- STORM MANHOLE
- TELEPHONE PEDESTAL
- TRAFFIC CONTROL BOX
- TRAFFIC SIGNAL POLE
- TRAFFIC PULL BOX
- TRAVERSE
- TREE (SEE DESCRIPTION)
- PALM
- TELEVISION PEDESTAL
- WATER MANHOLE
- WATER METER
- WATER VALVE
- YARD LIGHT
- CURB RAMP
- PAVERS
- RIGHT-OF-WAY
- CHAINLINK FENCE
- CONCRETE / GUARDRAIL / BARRIER
- OVERHEAD ELECTRIC
- OVERHEAD TRAFFIC SIGNAL
- WOOD FENCE
- WROUGHT IRON FENCE

ABBREVIATIONS LEGEND:

C.C.A.D.	COMAL COUNTY APPRAISAL DISTRICT
CMP	CORRUGATED METAL PIPE
COMM	COMMUNICATION
CONC	CONCRETE
ELEC	ELECTRIC
FL	FLOWLINE
FND	FOUND
G / GUT	GUTTER
IR	IRON ROD
LND	LANDSCAPED
No.	NUMBER
(NFV)	NOT FIELD VERIFIED
OHE	OVERHEAD ELECTRIC
PLT	PLANTER
PVC	POLYVINYL CHLORIDE PIPE
(R)	PER RECORD DRAWING
RCP	REINFORCED CONCRETE PIPE
SAN	SANITARY SEWER
STM	STORM SEWER
S/W	SIDEWALK
TC	TOP OF CURB
(TYP)	TYPICAL
U/G	UNDERGROUND
WCS	WITH CAP STAMPED
W.I.	WROUGHT IRON
W/	WITH
WTR	WATERLINE

PROPOSED LEGEND

- D47 PROPOSED DRIVEWAY NUMBER
- D51 PROPOSED DRIVEWAY NUMBER WITH CROSS SLOPE >5%
- R RAMP
- F FLARE
- L LANDING

NOTES:

1. EXISTING GROUND CONDITIONS ARE SUCH THAT STORM RUNOFF SHEET FLOWS FROM RESIDENTIAL PROPERTIES TO COMMON ST AND THEN GENERALLY TO THE COMAL RIVER ON THE WESTERN SIDE OF THE PROJECT AND TO THE GUADALUPE RIVER ON THE EASTERN SIDE OF THE PROJECT.
2. EXISTING DRAINAGE TO REMAIN UNCHANGED. PROPOSED SIDEWALK SHALL NOT IMPEDE SURFACE RUNOFF NOR CREATE PONDING AT ANY POINT ALONG PROPOSED ALIGNMENT.
3. CONTRACTOR IS RESPONSIBLE FOR SELECTING ACTUAL ENTRANCE/EXIT LOCATIONS AND MAKING PROPER ARRANGEMENTS TO AVOID UTILITY, FACILITY AND TRAFFIC CONFLICTS AS REQUIRED. CRANE MAT OR SIMILAR DEVICES SHALL BE USED AS NEEDED.
4. CONTRACTOR SHALL TAKE PROPER PRECAUTIONS TO AVOID TRACKING SOIL & DEBRIS ONTO ROADWAY AND IS RESPONSIBLE FOR REMOVING ANY SOIL & DEBRIS INCIDENTAL TO CONSTRUCTION FROM ROADWAY AS SOON AS PRACTICABLE.
5. CONTRACTOR IS RESPONSIBLE FOR LOCATING AND UTILIZING CONCRETE WASHOUT AREA/CONTAINMENT DURING CONSTRUCTION.
6. INLET PROTECTION BARRIERS (SAND TUBE, SILT SACK OR SIMILAR) SHALL BE USED ON HARD SURFACES (E.G. CONCRETE DITCH EMBANKMENT AND ROADWAYS) WHERE SILT FENCE CANNOT BE INSTALLED. EXISTING CURB INLETS ADJACENT AND DOWNSTREAM TO THE PROJECT SHALL BE PROTECTED, INCLUDING THOSE ACROSS THE STREET. NOT ALL INLETS ARE SHOWN ON PLAN.
7. CONTRACTOR SHALL MINIMIZE DISTURBANCE OF EXISTING SURFACE DUE TO CONSTRUCTION WORK, MATERIAL STORAGE AND TRANSPORTATION OF MATERIAL AND EQUIPMENT. CONTRACTOR IS RESPONSIBLE FOR RESURFACING DISTURBED AREAS TO MATCH EXISTING CONDITIONS OR MAKE IT BETTER.
8. NO WORK THAT COULD HAVE AN IMPACT TO THE EXISTING FEMA 100YR WSEL IS BEING PROPOSED FOR THIS PROJECT.
9. FPA NOTIFICATION FOR COMAL COUNTY/CITY WAS SUBMITTED IN WRITING ON 11/29/23.

0 20 40 Feet

REV	DESCRIPTION	DATE	APPR
0	ISSUED FOR BID	02/12/24	AG

SIDEWALK PLAN 7

COMMON STREET PEDESTRIAN IMPROVEMENTS

CITY OF NEW BRAUNFELS
550 Landa Street | New Braunfels, TX 78130

DESIGN BY: KM
DRAWN BY: EFC
CHECKED BY: JB
APPROVED BY: AG

City of New Braunfels

ENGINEER:
THE GOODMAN CORPORATION
3200 TRAVIS, SUITE 200
HOUSTON, TEXAS 77006
www.TheGoodmanCorp.com
(713) 951-7951
TBPELS Firm Registration No. 19990

SURVEYOR:
MBCO ENGINEERING + SURVEYING

STATE OF TEXAS
ASHISH GHOSH
111103
LICENSED
PROFESSIONAL ENGINEER
2/13/2024

DATE: 02/12/2024
SCALE: AS NOTED

SHEET NUMBER
44 OF 97

W:\00_TGC Project Files\MBR100\CAD\NBR109_SW_PLAN.dwg, 2/12/2024

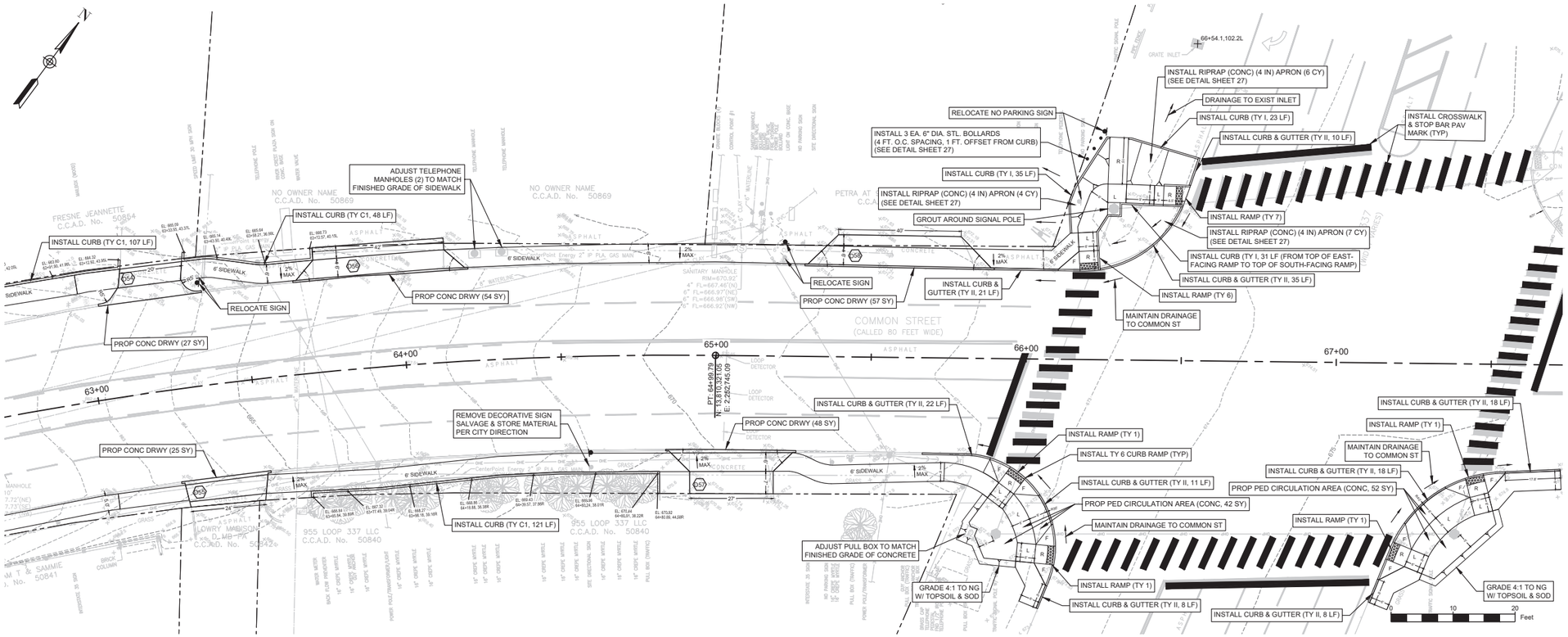

SIDEWALK - STA. 63+00 TO 67+50

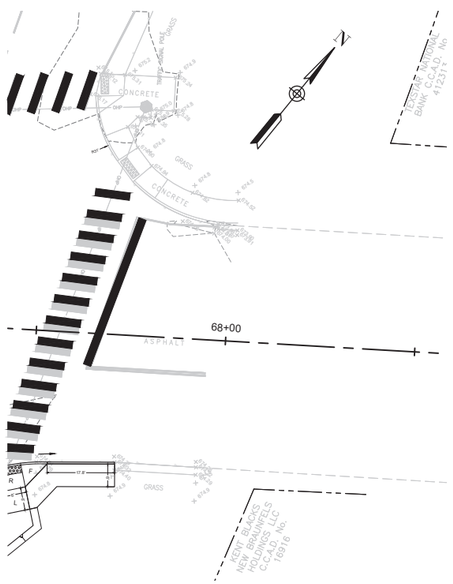

SIDEWALK - STA. 67+50 TO 68+50

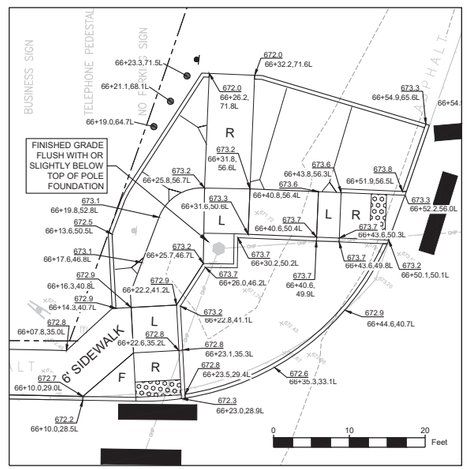

NORTHWEST RAMP ELEVATIONS

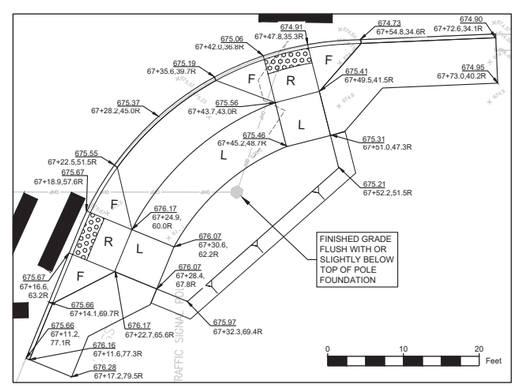

SOUTHEAST RAMP ELEVATIONS

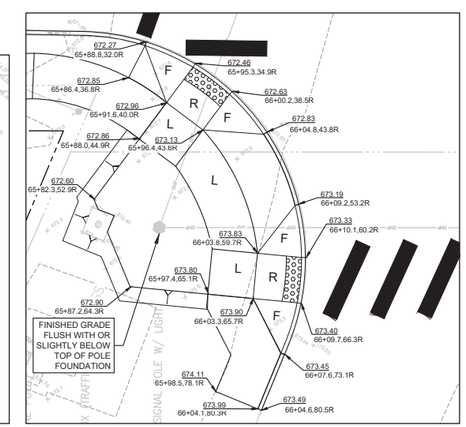

SOUTHWEST RAMP ELEVATIONS

NOTE: ELEVATIONS POINTING TO FACE OF CURB ARE GUTTER FLOW LINE ELEVATIONS; ELEVATIONS POINTING TO BACK OF CURB ARE TOP OF CURB ELEVATIONS.

SYMBOL LEGEND:

- BACK FLOW PREVENTER
- "BB" INLET
- BENCHMARK
- BOLLARD / POST
- BRACE POLE
- BUSINESS SIGN (SEE DESCRIPTION)
- BURIED CABLE MARKER
- CLEAN OUT
- CREPE MYRTLE
- ELECTRIC JUNCTION BOX
- FIRE HYDRANT
- GUY ANCHOR
- COMMUNICATIONS HANDHOLE
- HISTORICAL MARKER
- IRRIGATION CONTROL VALVE
- FOUND IRON ROD / NAIL / "X" (SEE DESCRIPTION)
- MAILBOX
- POLE
- POWER POLE
- POWER POLE W/ CONDUIT
- POWER POLE W/ LIGHT
- POWER POLE W/ TRANSFORMER
- PIPE RISER
- SANITARY MANHOLE
- TELEPHONE MANHOLE
- SIGN (SEE DESCRIPTION)
- SIGN DOUBLE POST
- LIGHT POLE
- STORM MANHOLE
- TELEPHONE PEDESTAL
- TRAFFIC CONTROL BOX
- TRAFFIC SIGNAL POLE
- TRAFFIC PULL BOX
- TRAVERSE
- TREE (SEE DESCRIPTION)
- PALM
- TELEVISION PEDESTAL
- WATER MANHOLE
- WATER METER
- WATER VALVE
- YARD LIGHT
- CURB RAMP
- PAVERS
- RIGHT-OF-WAY
- CHAINLINK FENCE
- CONCRETE / GUARDRAIL / BARRIER
- OVERHEAD ELECTRIC
- OVERHEAD TRAFFIC SIGNAL
- WOOD FENCE
- WROUGHT IRON FENCE

ABBREVIATIONS LEGEND:

C.C.A.D.	COMAL COUNTY APPRAISAL DISTRICT
CMP	CORRUGATED METAL PIPE
COMM	COMMUNICATION
CONC	CONCRETE
ELEC	ELECTRIC
FL	FLOWLINE
FND	FOUND
G / GUT	GUTTER
IR	IRON ROD
LND	LANDSCAPED
No.	NUMBER
(NFV)	NOT FIELD VERIFIED
OHE	OVERHEAD ELECTRIC
PLT	PLANTER
PVC	POLYVINYL CHLORIDE PIPE
(R)	PER RECORD DRAWING
RCP	REINFORCED CONCRETE PIPE
SAN	SANITARY SEWER
STM	STORM SEWER
S/W	SIDEWALK
TC	TOP OF CURB
(TYP)	TYPICAL
U/G	UNDERGROUND
WCS	WITH CAP STAMPED
W.I.	WROUGHT IRON
W/	WITH
WTR	WATERLINE

PROPOSED LEGEND

- D47 — PROPOSED DRIVEWAY NUMBER
- D51 — PROPOSED DRIVEWAY NUMBER WITH CROSS SLOPE >5%
- R — RAMP
- F — FLARE
- L — LANDING

NOTES:

1. EXISTING GROUND CONDITIONS ARE SUCH THAT STORM RUNOFF SHEET FLOWS FROM RESIDENTIAL PROPERTIES TO COMMON ST AND THEN GENERALLY TO THE COMAL RIVER ON THE WESTERN SIDE OF THE PROJECT AND TO THE GUADALUPE RIVER ON THE EASTERN SIDE OF THE PROJECT.
2. EXISTING DRAINAGE TO REMAIN UNCHANGED. PROPOSED SIDEWALK SHALL NOT IMPEDE SURFACE RUNOFF NOR CREATE PONDING AT ANY POINT ALONG PROPOSED ALIGNMENT.
3. CONTRACTOR IS RESPONSIBLE FOR SELECTING ACTUAL ENTRANCE/EXIT LOCATIONS AND MAKING PROPER ARRANGEMENTS TO AVOID UTILITY, FACILITY AND TRAFFIC CONFLICTS AS REQUIRED. CRANE MAT OR SIMILAR DEVICES SHALL BE USED AS NEEDED.
4. CONTRACTOR SHALL TAKE PROPER PRECAUTIONS TO AVOID TRACKING SOIL & DEBRIS ONTO ROADWAY AND IS RESPONSIBLE FOR REMOVING ANY SOIL & DEBRIS INCIDENTAL TO CONSTRUCTION FROM ROADWAY AS SOON AS PRACTICABLE.
5. CONTRACTOR IS RESPONSIBLE FOR LOCATING AND UTILIZING CONCRETE WASHOUT AREA/CONTAINMENT DURING CONSTRUCTION.
6. INLET PROTECTION BARRIERS (SAND TUBE, SILT SACK OR SIMILAR) SHALL BE USED ON HARD SURFACES (E.G. CONCRETE DITCH EMBANKMENT AND ROADWAYS) WHERE SILT FENCE CANNOT BE INSTALLED. EXISTING CURB INLETS ADJACENT AND DOWNSTREAM TO THE PROJECT SHALL BE PROTECTED, INCLUDING THOSE ACROSS THE STREET. NOT ALL INLETS ARE SHOWN ON PLAN.
7. CONTRACTOR SHALL MINIMIZE DISTURBANCE OF EXISTING SURFACE DUE TO CONSTRUCTION WORK, MATERIAL STORAGE AND TRANSPORTATION OF MATERIAL AND EQUIPMENT. CONTRACTOR IS RESPONSIBLE FOR RESURFACING DISTURBED AREAS TO MATCH EXISTING CONDITIONS OR MAKE IT BETTER.
8. NO WORK THAT COULD HAVE AN IMPACT TO THE EXISTING FEMA 100YR WSEL IS BEING PROPOSED FOR THIS PROJECT.
9. FPA NOTIFICATION FOR COMAL COUNTY/CITY WAS SUBMITTED IN WRITING ON 11/29/23.

0 20 40 Feet

REV	DESCRIPTION	DATE	APPR
0	ISSUED FOR BID	02/12/24	AG

SIDEWALK PLAN 8

COMMON STREET PEDESTRIAN IMPROVEMENTS

CITY OF NEW BRAUNFELS
550 Landa Street | New Braunfels, TX 78130

DESIGN BY: KM
DRAWN BY: EFC
CHECKED BY: JB
APPROVED BY: AG

City of New Braunfels

ENGINEER:
THE GOODMAN CORPORATION
3200 TRAVIS, SUITE 200
HOUSTON, TEXAS 77006
www.TheGoodmanCorp.com
(713) 951-7951
TBPELS Firm Registration No. 19990

SURVEYOR:
MBCO ENGINEERING + SURVEYING

STATE OF TEXAS
ASHISH GHOSH
111103
LICENSED PROFESSIONAL ENGINEER
2/13/2024

DATE: 02/12/2024
SCALE: AS NOTED

SHEET NUMBER
45 OF 97

W:\00_TGC Project Files\NBR100\CAD\NBR100_SW_PLAN.dwg, 2/12/2024

DISCLAIMER:
The use of this standard is governed by the "Texas Engineering Practice Act". No warranty of any kind is made by TxDOT for any purpose whatsoever. TxDOT assumes no responsibility for the conversion of this standard to other formats or for incorrect results or damages resulting from its use.

TYPE 1

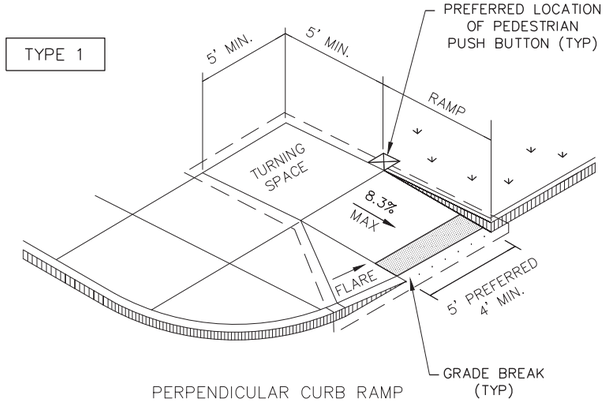

PERPENDICULAR CURB RAMP

TYPE 2

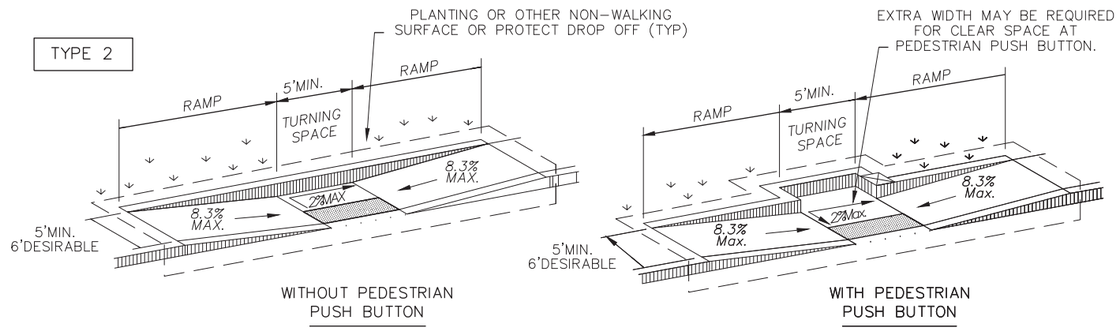

WITHOUT PEDESTRIAN PUSH BUTTON

WITH PEDESTRIAN PUSH BUTTON

PARALLEL CURB RAMP

TYPE 3

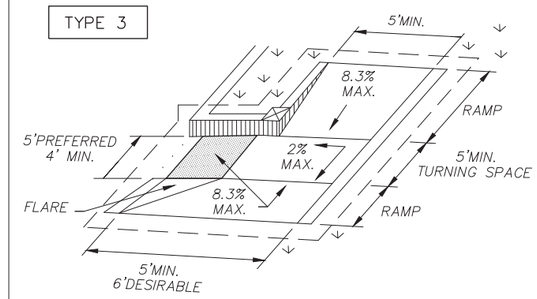

TYPE 20

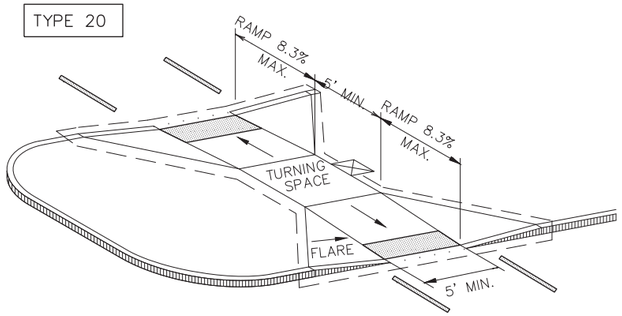

CURB RAMPS AT MEDIAN ISLANDS

TYPE 7

(SIDEWALK SET BACK FROM CURB)

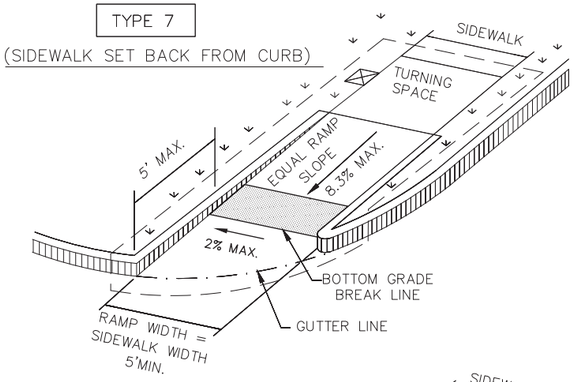

CROSS SLOPE NOT TO EXCEED 2% ON ANY PORTION OF RAMP, TURNING SPACE OR TRANSITION TO STREET.

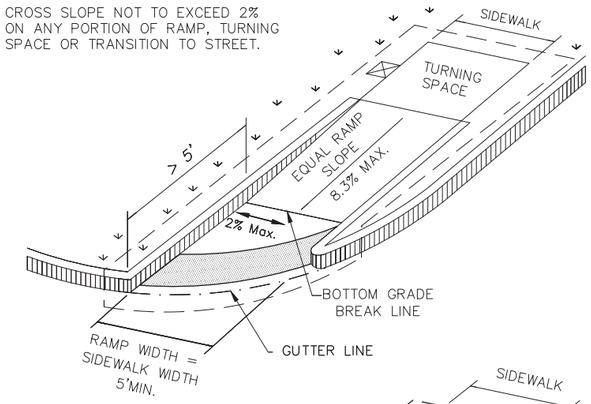

TYPE 6

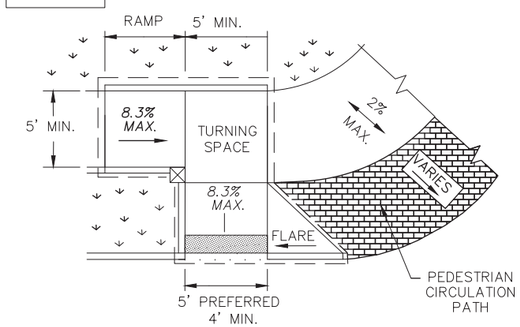

COMBINATION CURB RAMPS

TYPE 21

INSTALL DETECTABLE WARNING SURFACE AT EACH END OF THE CUT-THROUGH RAMP WITH A MINIMUM 2' USUAL SIDEWALK SURFACE BETWEEN. IF MEDIAN IS LESS THAN 6' WIDE, ELIMINATE DETECTABLE WARNING SURFACES.

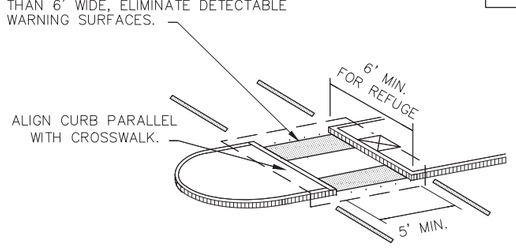

NOTE: CURB DETAILS ARE SHOWN ELSEWHERE IN THE PLANS.

TYPE 10

(SIDEWALK ADJACENT TO CURB)

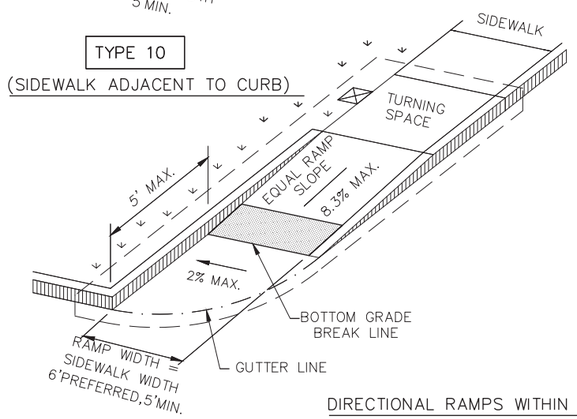

CROSS SLOPE NOT TO EXCEED 2% ON ANY PORTION OF RAMP, TURNING SPACE OR TRANSITION TO STREET.

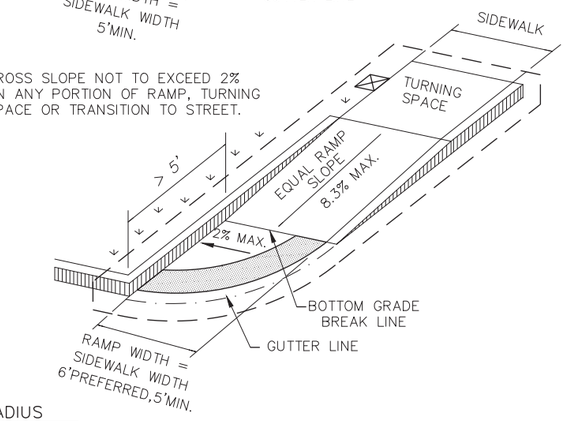

DIRECTIONAL RAMPS WITHIN RADIUS

TYPE 5

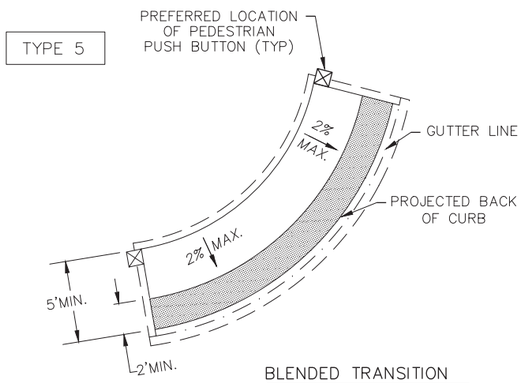

BLENDED TRANSITION
(FLUSH LANDING)

TYPE 22

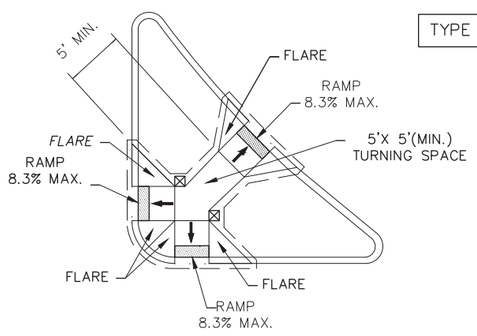

COMBINATION ISLAND RAMPS

BOTTOM GRADE BREAK OF CURB RAMP WILL NORMALLY BE AT GUTTER LINE. SURFACE SLOPES AT GRADE BREAKS SHALL BE FLUSH.

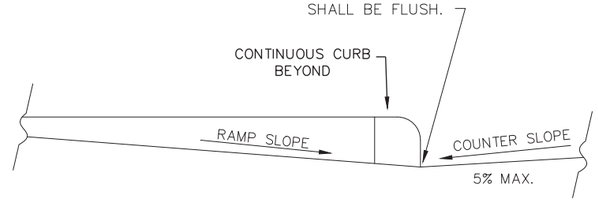

TYPICAL SECTION OF PERPENDICULAR CURB RAMP AT CONNECTION TO ROADWAY

NOTES / LEGEND:

SEE GENERAL NOTES ON SHEET 2 OF 4 FOR MORE INFORMATION.

DENOTES PLANTING OR NON-WALKING SURFACE NOT PART OF PEDESTRIAN CIRCULATION PATH.

GUTTER LINE

DETECTABLE WARNING SURFACE

GRADE BREAK

DENOTES PREFERRED LOCATION OF PEDESTRIAN PUSH BUTTON IF APPLICABLE.

RAMP LIMITS OF PAYMENT

SHEET 1 OF 4

Texas Department of Transportation — Design Division Standard

PEDESTRIAN FACILITIES CURB RAMPS

PED-18

FILE: ped18	DN: TxDOT	DW: VP	CK: KM	CK: PK &JG
© TxDOT: MARCH,2002	CONT	SECT	JOB	HIGHWAY
REVISIONS REVISED 08,2005 REVISED 06,2012 REVISED 01,2018	0915	17	076	COMMON ST
	DIST	COUNTY		SHEET NO.
	SAT	COMAL		46 OF 97

DATE: 2/8/2024
FILE: W:\00_TGC Project Files\NBR100\CAD\NBR100_GENERAL.dwg

GENERAL NOTES

CURB RAMPS

1. Install a curb ramp or blended transition at each pedestrian street crossing.
2. All slopes shown are maximum allowable. Cross slopes of 1.5% and lesser running should be used. Adjust curb ramp length or grade of approach sidewalks as directed.
3. Maximum allowable cross slope on sidewalk and curb ramp surfaces is 2%.
4. The minimum sidewalk width is 5'. Where the sidewalk is adjacent to the back of curb, a 6' sidewalk width is desirable. Where a 5' sidewalk cannot be provided due to site constraints, sidewalk width may be reduced to 4' for short distances. 5'x 5' passing areas at intervals not to exceed 200' are required.
5. Turning Spaces shall be 5'x 5' minimum. Cross slope shall be maximum 2%.
6. Clear space at the bottom of curb ramps shall be a minimum of 4'x 4' wholly contained within the crosswalk and wholly outside the parallel vehicular travel path.
7. Provide flared sides where the pedestrian circulation path crosses the curb ramp. Flared sides shall be sloped at 10% maximum, measured parallel to the curb. Returned curbs may be used only where pedestrians would not normally walk across the ramp, either because the adjacent surface is planted, substantially obstructed, or otherwise protected.
8. Additional information on curb ramp location, design, light reflective value and texture may be found in the latest draft of the Proposed Guidelines for Pedestrian Facilities in the Public Right of Way (PROWAG) as published by the U.S. Architectural and Transportation Barriers Compliance Board (Access Board).
9. To serve as a pedestrian refuge area, the median should be a minimum of 6' wide, measured from back of curbs. Medians should be designed to provide accessible passage over or through them.
10. Small channelization islands, which do not provide a minimum 5'x 5' landing at the top of curb ramps, shall be cut through level with the surface of the street.
11. Crosswalk dimensions, crosswalk markings and stop bar locations shall be as shown elsewhere in the plans. At intersections where crosswalk markings are not required, curb ramps shall align with theoretical crosswalks unless otherwise directed.
12. Provide curb ramps to connect the pedestrian access route at each pedestrian street crossing. Handrails are not required on curb ramps.
13. Curb ramps and landings shall be constructed and paid for in accordance with Item 531 "Sidewalks".
14. Place concrete at a minimum depth of 5" for ramps, flares and landings, unless otherwise directed.
15. Furnish and install No. 3 reinforcing steel bars at 18" o.c. both ways, unless otherwise directed.
16. Provide a smooth transition where the curb ramps connect to the street.
17. Curbs shown on sheet 1 within the limits of payment are considered part of the curb ramp for payment, whether it is concrete curb, gutter, or combined curb and gutter.
18. Existing features that comply with applicalble standards may remain in place unless otherwise shown on the plans.

DETECTABLE WARNING MATERIAL

19. Curb ramps must contain a detectable warning surface that consists of raised truncated domes complying with PROWAG. The surface must contrast visually with adjoining surfaces, including side flares. Furnish and install an approved cast-in-place dark brown or dark red detectable warning surface material adjacent to uncolored concrete, unless specified elsewhere in the plans.
20. Detectable Warning Materials must meet TxDOT Departmental Materials Specification DMS 4350 and be listed on the Material Producer List. Install products in accordance with manufacturer's specifications.
21. Detectable warning surfaces must be firm, stable and slip resistant.
22. Detectable warning surfaces shall be a minimum of 24 inches in depth in the direction of pedestrian travel, and extend the full width of the curb ramp or landing where the pedestrian access route enters the street.
23. Detectable warning surfaces shall be located so that the edge nearest the curb line is at the back of curb and neither end of that edge is greater than 5 feet from the back of curb. Detectable warning surfaces may be curved along the corner radius.
24. Shaded areas on Sheet 1 of 4 indicate the approximate location for the detectable warning surface for each curb ramp type.

DETECTABLE WARNING PAVERS (IF USED)

25. Furnish detectable warning paver units meeting all requirements of ASTM C-936, C-33. Lay in a two by two unit basket weave pattern or as directed.
26. Lay full-size units first followed by closure units consisting of at least 25 percent (25%) of a full unit. Cut detectable warning paver units using a power saw.

SIDEWALKS

27. Provide clear ground space at operable parts, including pedestrian push buttons. Operable parts shall be placed within unobstructed reach range specified in PROWAG section R406.
28. Place traffic signal or illumination poles, ground boxes, controller boxes, signs, drainage facilities and other items so as not to obstruct the pedestrian access route or clear ground space.
29. Street grades and cross slopes shall be as shown elsewhere in the plans.
30. Changes in level greater than 1/4 inch are not permitted.
31. The least possible grade should be used to maximize accessibility. The running slope of sidewalks and crosswalks within the public right of way may follow the grade of the parallel roadway. Where a continuous grade greater than five percent (5%) must be provided, handrails may be desirable to improve accessibility. Handrails may also be needed to protect pedestrians from potentially hazardous conditions. If provided, handrails shall comply with PROWAG R409.
32. Handrail extensions shall not protrude into the usable landing area or into intersecting pedestrian routes.
33. Driveways and turnouts shall be constructed and paid for in accordance with Item "Intersections, Driveways and Turnouts". Sidewalks shall be constructed and paid for in accordance with Item, "Sidewalks".
34. Sidewalk details are shown elsewhere in the plans.

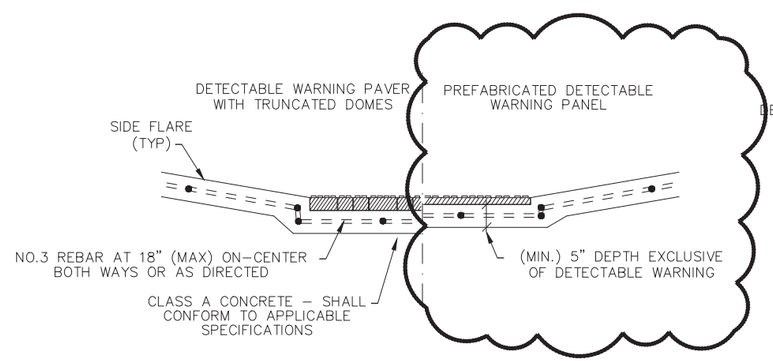

SECTION VIEW DETAIL

CURB RAMP AT DETECTIBLE WARNINGS

DETECTABLE WARNING SURFACE DETAILS

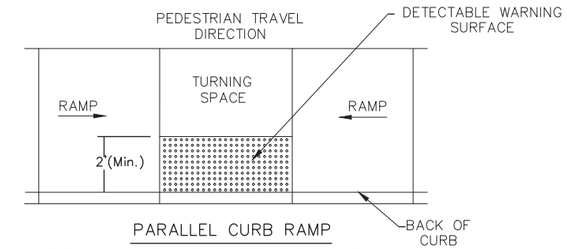

PARALLEL CURB RAMP

TYPICAL PLACEMENT OF DETECTABLE WARNING SURFACE ON LANDING AT STREET EDGE.

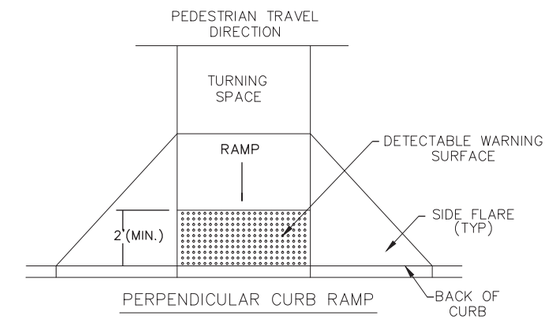

PERPENDICULAR CURB RAMP

TYPICAL PLACEMENT OF DETECTABLE WARNING SURFACE ON SLOPING RAMP RUN.

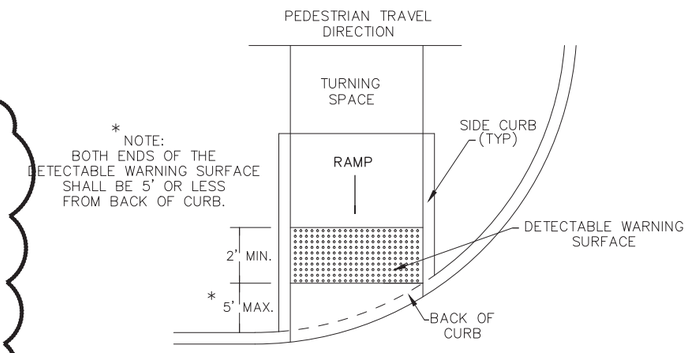

DIRECTIONAL CURB RAMP

TYPICAL PLACEMENT OF DETECTABLE WARNING SURFACE ON SLOPING RAMP RUN.

DISCLAIMER:
The use of this standard is governed by the "Texas Engineering Practice Act". No warranty of any kind is made by TxDOT for any purpose whatsoever. TxDOT assumes no responsibility for the conversion of this standard to other formats or for incorrect results or damages resulting from its use.

DATE: 2/8/2024
FILE: W:\00_TGC Project Files\NBR100\CAD\NBR100_GENERAL.dwg

SHEET 2 OF 4

Texas Department of Transportation — Design Division Standard

PEDESTRIAN FACILITIES
CURB RAMPS

PED-18

FILE: ped18	DN: TxDOT		CK: KM	CK: PK &JG
© TxDOT: MARCH,2002	CONT	SECT	JOB	HIGHWAY
REVISIONS REVISED 08,2005 REVISED 06,2012 REVISED 01,2018	0915	17	076	COMMON ST
	DIST		COUNTY	SHEET NO.
	SAT		COMAL	47 OF 97

SIDEWALK TREATMENT AT DRIVEWAYS

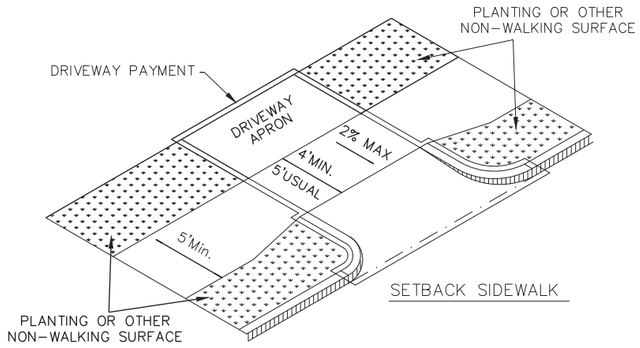

SETBACK SIDEWALK

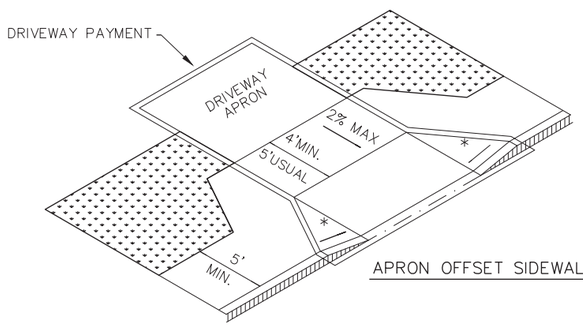

APRON OFFSET SIDEWALK

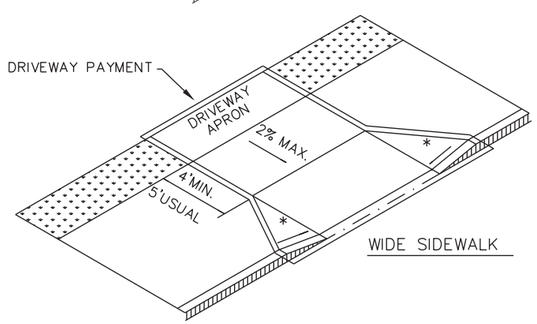

WIDE SIDEWALK

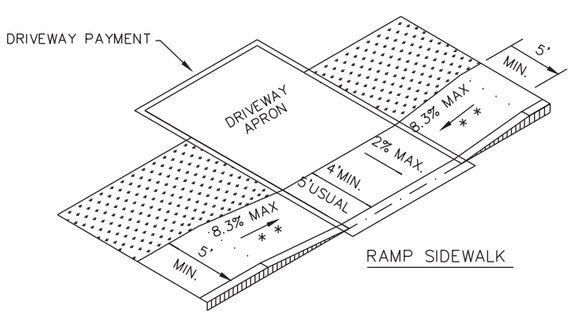

RAMP SIDEWALK

NOTES:

* WHERE DRIVEWAYS CROSS THE PEDESTRIAN ROUTE, SIDES SHALL BE FLARED AT 10% MAX SLOPE.

* * IF CURB HEIGHT IS GREATER THAN 6 INCHES, USE GRADE LESS THAN OR EQUAL TO 5%. HANDRAIL AND DETECTABLE WARNING ARE NOT REQUIRED.

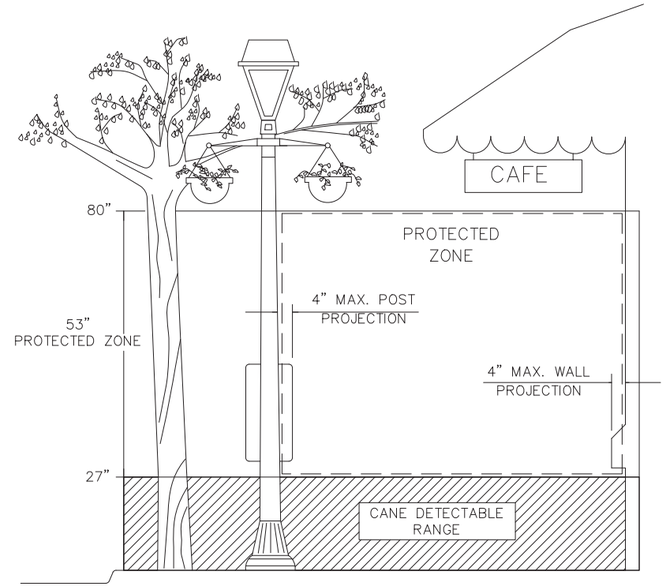

PROTECTED ZONE

NOTE: IN PEDESTRIAN CIRCULATION AREA, MAXIMUM 4" PROJECTION FOR POST OR WALL MOUNTED OBJECTS BETWEEN 27" AND 80" ABOVE THE SURFACE.

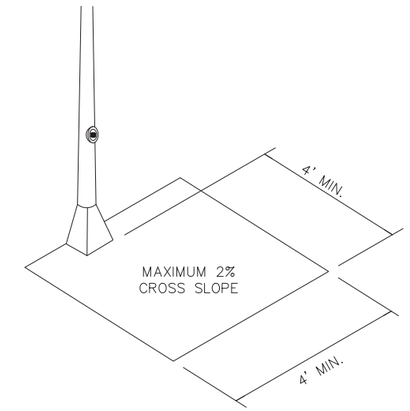

CLEAR SPACE ADJACENT TO PEDESTRIAN PUSH BUTTON

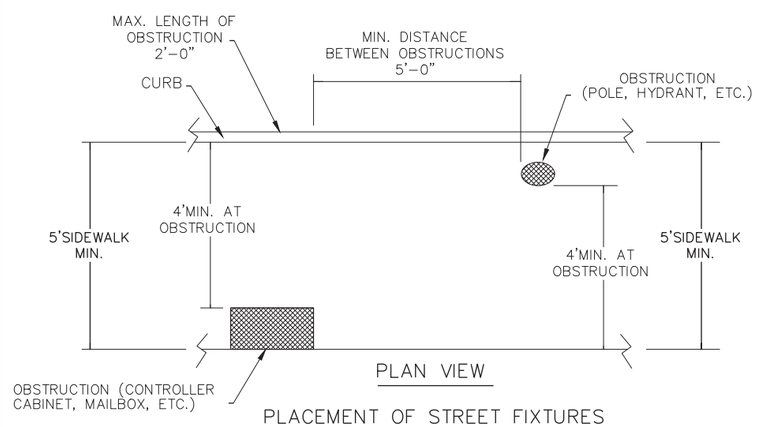

PLAN VIEW

PLACEMENT OF STREET FIXTURES

NOTE: ITEMS NOT INTENDED FOR PUBLIC USE. MINIMUM 4' X 4' CLEAR GROUND SPACE REQUIRED AT PUBLIC USE FIXTURES.

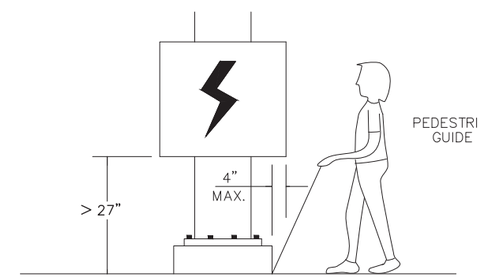

WHEN AN OBSTRUCTION OF A HEIGHT GREATER THAN 27" FROM THE SURFACE WOULD CREATE A PROTRUSION OF MORE THAN 4" INTO THE PEDESTRIAN CIRCULATION AREA, CONSTRUCT ADDITIONAL CURB OR FOUNDATION AT THE BOTTOM TO PROVIDE A MAXIMUM 4" OVERHANG.

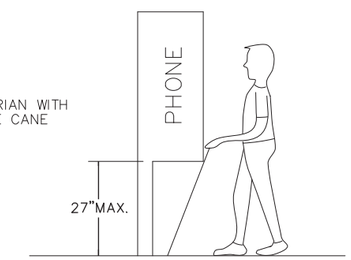

PROTRUDING OBJECTS OF A HEIGHT 27" ARE DETECTABLE BY CANE AND DO NOT REQUIRE ADDITIONAL TREATMENT.

DETECTION BARRIER FOR VERTICAL CLEARANCE <80"

SHEET 3 OF 4

Texas Department of Transportation — Design Division Standard

PEDESTRIAN FACILITIES CURB RAMPS

PED-18

FILE: ped18	DN: TxDOT	DW: VP	CK: KM	CK: PK & JG
© TxDOT: MARCH, 2002	CONT	SECT	JOB	HIGHWAY
REVISIONS REVISED 08,2005 REVISED 06,2012 REVISED 01,2018	0915	17	076	COMMON ST
	DIST	COUNTY		SHEET NO.
	SAT	COMAL		48 OF 97

DISCLAIMER:
The use of this standard is governed by the "Texas Engineering Practice Act". No warranty of any kind is made by TxDOT for any purpose whatsoever. TxDOT assumes no responsibility for the conversion of this standard to other formats or for incorrect results or damages resulting from its use.

DATE: 2/8/2024
FILE: W:\00_TGC Project Files\NBR100\CAD\NBR100_GENERAL.dwg

TYPICAL CROSSING LAYOUTS

SEE SHEET 1 OF 4 FOR DETAILS AND DIMENSIONS

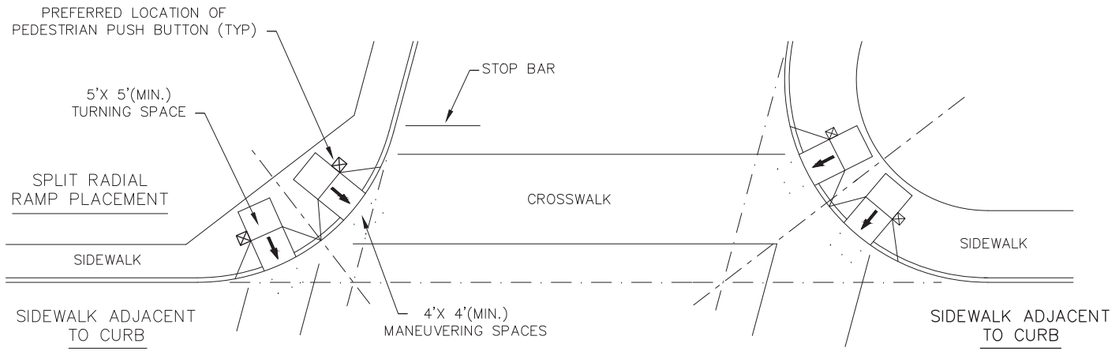

SKEWED INTERSECTION WITH "LARGE" RADIUS

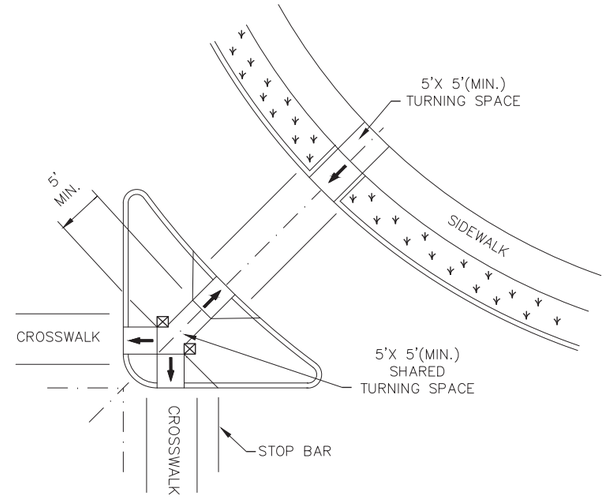

AT INTERSECTION
W/FREE RIGHT TURN & ISLAND

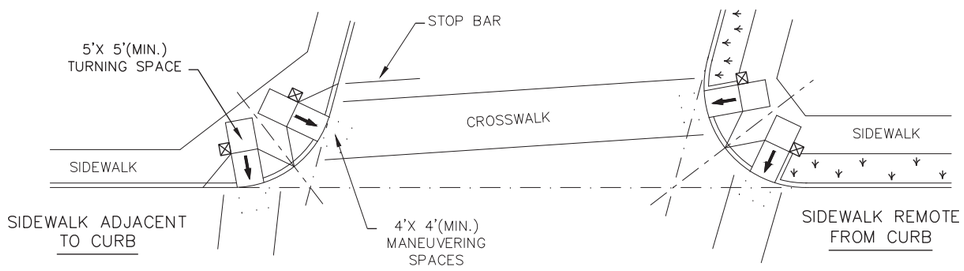

SKEWED INTERSECTION WITH "SMALL" RADIUS

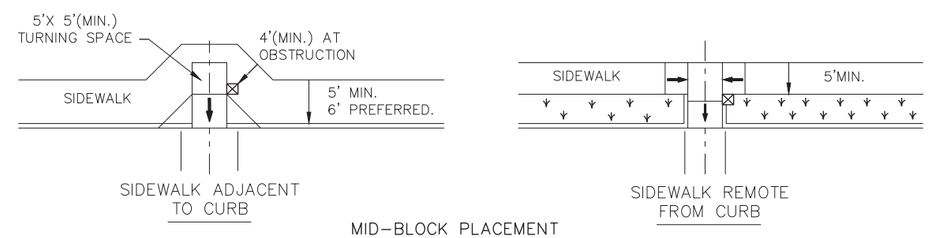

MID-BLOCK PLACEMENT
PERPENDICULAR RAMPS

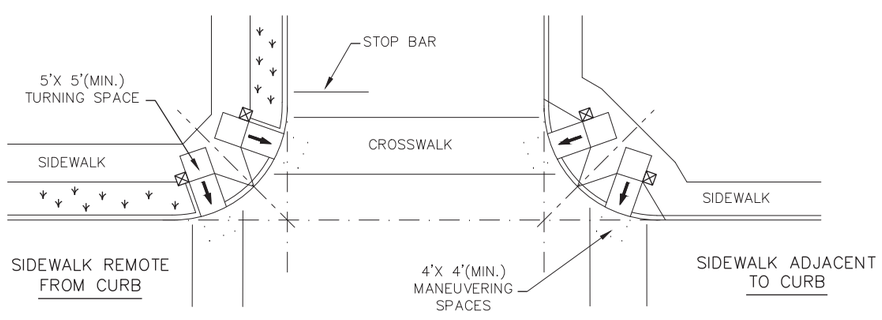

NORMAL INTERSECTION WITH "SMALL" RADIUS

LEGEND:

SHOWS DOWNWARD SLOPE. →

DENOTES PREFERRED LOCATION OF PEDESTRIAN PUSH BUTTON (IF APPLICABLE). ⊠

DENOTES PLANTING OR NON-WALKING SURFACE NOT PART OF PEDESTRIAN CIRCULATION PATH.

SHEET 4 OF 4

Texas Department of Transportation — Design Division Standard

PEDESTRIAN FACILITIES CURB RAMPS

PED-18

FILE: ped18	DN: TxDOT	DW: VP	CK: KM	CK: PK &JG
© TxDOT: MARCH,2002	CONT	SECT	JOB	HIGHWAY
REVISIONS REVISED 08.2005 REVISED 06.2012 REVISED 01.2018	0915	17	076	COMMON ST
	DIST		COUNTY	SHEET NO.
	SAT		COMAL	49 OF 97

DISCLAIMER:
The use of this standard is governed by the "Texas Engineering Practice Act". No warranty of any kind is made by TxDOT for any purpose whatsoever. TxDOT assumes no responsibility for the conversion of this standard to other formats or for incorrect results or damages resulting from its use.

DATE: 2/8/2024
FILE: W:\00_TGC Project Files\NBR100\CAD\NBR100_GENERAL.dwg

SIDEWALK
(RESIDENTIAL)

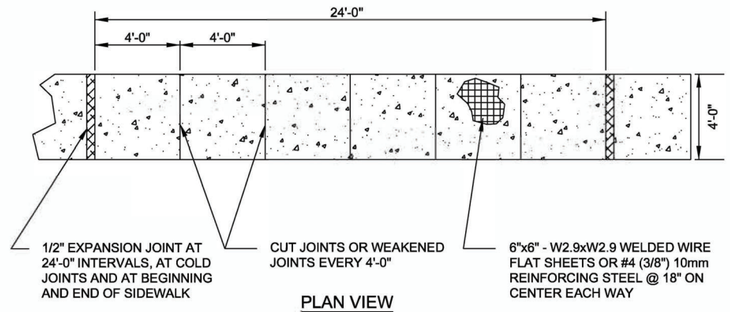

PLAN VIEW

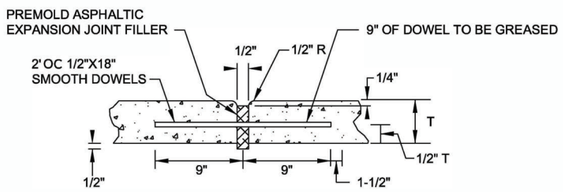

EXPANSION JOINT

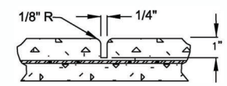

WEAKENED PLANE JOINT

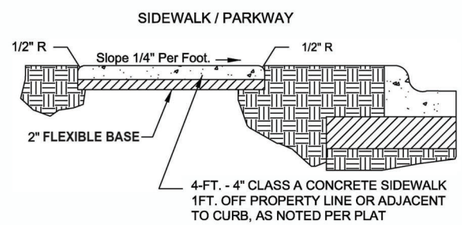

TYPICAL SECTION

NOTES:

1. EXPANSION JOINTS ARE TO BE USED BETWEEN CONCRETE DRIVEWAY AND SIDEWALK.
2. SCORED JOINTS DENOTE SIDEWALK ACROSS THE DRIVEWAY AND ARE TO BE PLACED AT LEAST 1/3 rd. THROUGH THE SLAB THICKNESS.
3. ALL SIDEWALK AND DRIVEWAY CONSTRUCTION SHALL MEET A.D.A. SPECIFICATIONS.

DATE APPROVED: 07/2008	DWG. NO: ST-016	SCALE: N.T.S.	City of New Braunfels ENGINEERING DEPARTMENT
DRAWN BY: RAS	SHEET: 1 OF 1		
FILENAME: SIDEWALK (RESIDENTIAL)			

SIDEWALK
(COMMERCIAL - INDUSTRIAL)

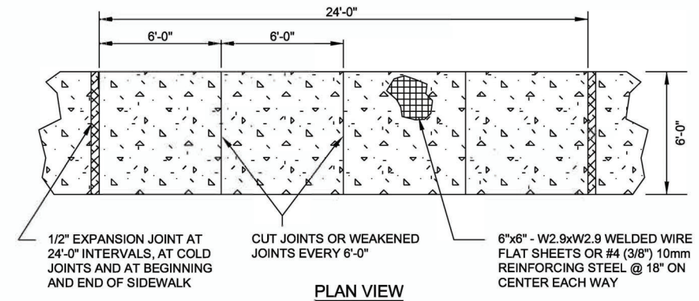

PLAN VIEW

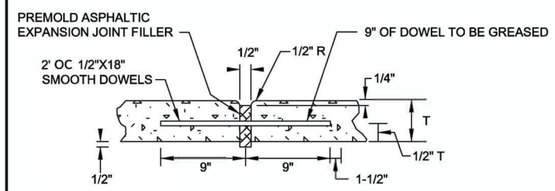

EXPANSION JOINT

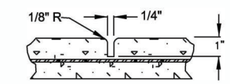

WEAKENED PLANE JOINT

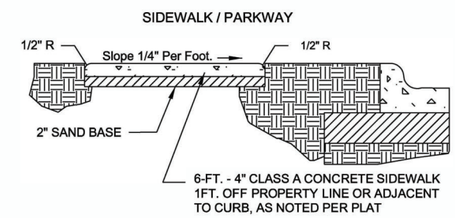

TYPICAL SECTION

NOTES:

1. EXPANSION JOINTS ARE TO BE USED BETWEEN CONCRETE DRIVEWAY AND SIDEWALK.
2. SCORED JOINTS DENOTE SIDEWALK ACROSS THE DRIVEWAY AND ARE TO BE PLACED AT LEAST 1/3 rd. THROUGH THE SLAB THICKNESS.
3. ALL SIDEWALK AND DRIVEWAY CONSTRUCTION SHALL MEET A.D.A. SPECIFICATIONS.

DATE APPROVED: 07/2008	DWG. NO: ST-017	SCALE: N.T.S.	City of New Braunfels ENGINEERING DEPARTMENT
DRAWN BY: RAS	SHEET: 1 OF 1		
FILENAME: SIDEWALK (COMMERCIAL - INDUSTRIAL)			

GENERAL NOTES

1. OBTAIN AND COMPLY WITH ALL APPLICABLE CITY, COUNTY, STATE, AND FEDERAL PERMITS AND APPROVALS, WITH ASSISTANCE FROM ENGINEER, IF NECESSARY. OBTAIN PERMIT (CERTIFICATION) FROM HARRIS COUNTY ENGINEER TO ENTER HARRIS COUNTY FLOOD CONTROL DISTRICT RIGHT-OF-WAY.
2. ESTABLISH TURF GRASS ON ALL DISTURBED AREAS. MINIMUM ACCEPTANCE CRITERIA ARE 75% COVERAGE OF ESTABLISHED VEGETATION AS PER THE PLANTING SHEETS AND NO EROSION OR RILLS DEEPER THAN 4".
3. CONTRACTOR SHALL FIELD VERIFY EXISTING CONDITIONS BEFORE BEGINNING CONSTRUCTION.
4. THE CONTRACTOR IS RESPONSIBLE FOR PROVIDING SECURITY TO PROTECT THE PROJECT SITE, CONTRACTOR PROPERTY, EQUIPMENT, AND WORK.
5. THE CONTRACTOR IS RESPONSIBLE FOR CLEANING STREETS OF CONSTRUCTION DIRT AND DEBRIS AT CLOSE OF EACH WORK DAY.
6. THE CONDITION OF THE ROAD AND/OR RIGHT-OF-WAY, UPON COMPLETION OF THE JOB SHALL BE AS GOOD AS OR BETTER THAN PRIOR TO STARTING WORK.
7. PRIOR TO CONSTRUCTION, THE CONTRACTOR, ALONG WITH CONCURRENCE FROM THE FIELD ENGINEER, SHALL DETERMINE HIS/HER LAY-DOWN AND/OR STAGING AREA LOCATIONS.
8. THE CONTRACTOR SHALL NOTIFY ALL PROPERTY OWNERS A MINIMUM OF 24 HOURS PRIOR TO BLOCKING DRIVEWAYS OR ENTERING UTILITY EASEMENTS.
9. TRAFFIC INGRESS AND EGRESS FOR DRIVEWAYS AND PEDESTRIAN ACCESS FACILITIES SHALL BE MAINTAINED THROUGHOUT CONSTRUCTION.
10. THE CONTRACTOR SHALL COORDINATE WITH ENGINEER PRIOR TO REMOVAL OF ANY FENCES, POSTS, MAILBOXES, PLANTERS, PERMANENT TRASH CONTAINERS, CULVERTS, ETC. OR SECTIONS THEREOF, THAT ENCROACH WITHIN THE RIGHT-OF-WAY.
11. CONTRACTOR SHALL PROTECT ALL MANHOLE COVERS, VALVE COVERS, VAULT LIDS, FIRE HYDRANTS, POWER POLES, GUY WIRES, AND TELEPHONE BOXES THAT ARE TO REMAIN IN PLACE AND UNDISTURBED DURING CONSTRUCTION.
12. ALL EXISTING CONCRETE PAVING, SIDEWALK, AND CURB DEMOLITION SHALL BE REMOVED AND DISPOSED OF BY CONTRACTOR. DISPOSAL SHALL BE AT AN APPROVED OFF-SITE, LAWFUL LOCATION, UNLESS DIRECTED OTHERWISE BY THE OWNER.
13. ITEMS REMOVED OR DAMAGED WITHIN THE PROJECT RIGHT-OF-WAY, DESIGNATED TO REMAIN, SHALL BE REPLACED WITH LIKE-KIND OR BETTER AT THE CONTRACTOR'S EXPENSE.
14. TREES, BUSHES, SHRUBBERY AND OTHER DAMAGED PLANTINGS DESIGNATED TO REMAIN SHALL BE REPLACED WITHIN 72 HOURS OF REMOVAL AND ARE TO BE THOROUGHLY WATERED-IN. NO SEPARATE PAY.
15. PAVED SURFACES, PAVEMENT MARKERS AND MARKINGS SHALL BE PROTECTED FROM DAMAGE BY TRACKED EQUIPMENT.
16. IRON RODS DISTURBED DURING CONSTRUCTION ARE TO BE REPLACED BY A REGISTERED PROFESSIONAL LAND SURVEYOR FOR THE ORIGINAL PROPERTY OWNER AT NO SEPARATE PAY.
17. CONSTRUCTION STAKING WILL BE PROVIDED BY THE CONTRACTOR. TWO COPIES OF STAKING NOTES TO BE PROVIDED TO THE ENGINEER PRIOR TO CONSTRUCTION.
18. THE COUNTY OR THE COUNTY'S SURVEYOR SHALL PROVIDE A BENCHMARK OR TEMPORARY BENCHMARK AND SURVEY CONTROLS.

REV	DESCRIPTION	DATE	APPR
0	ISSUED FOR BID	02/12/24	AG

SIDEWALK DETAILS

COMMON STREET PEDESTRIAN IMPROVEMENTS

CITY OF NEW BRAUNFELS
550 Landa Street | New Braunfels, TX 78130

DESIGN BY: KM
DRAWN BY: EFC
CHECKED BY: JB
APPROVED BY: AG

City of New Braunfels

ENGINEER:
THE GOODMAN CORPORATION
3200 TRAVIS, SUITE 200
HOUSTON, TEXAS 77006
www.TheGoodmanCorp.com
(713) 951-7951
TBPELS Firm Registration No. 19990

SURVEYOR:
MBCO
ENGINEERING + SURVEYING

STATE OF TEXAS
ASHISH GHOSH
111103
LICENSED
PROFESSIONAL ENGINEER
2/13/2024

DATE: 02/12/2024
SCALE: AS NOTED

W:\00_TGC Project Files\NBR100\CAD\NBR100_GENERAL.dwg, 2/12/2024

DRIVEWAY APRON
(RESIDENTIAL - ONE OR TWO FAMILY)

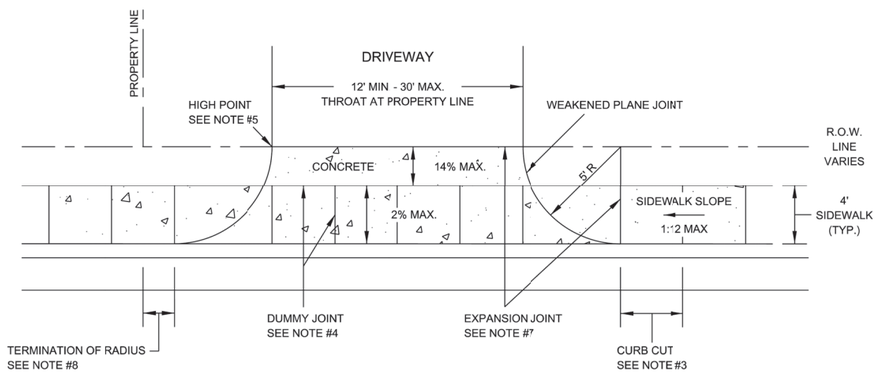

RADIUS PLAN VIEW

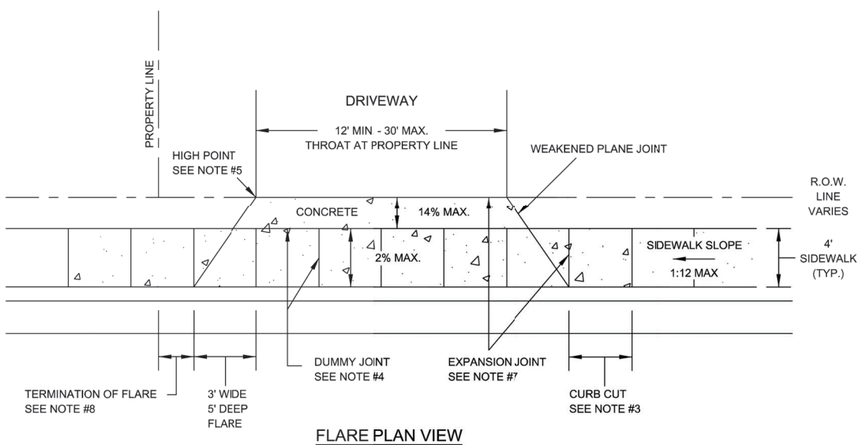

FLARE PLAN VIEW

DATE APPROVED: 04/2016	DWG. NO: ST-014.1	SCALE: N.T.S.
DRAWN BY: RAS	SHEET: 1 OF 2	
FILENAME: DRIVEWAY (RESIDENTIAL - ONE OR TWO FAMILY)		

City of New Braunfels — ENGINEERING DEPARTMENT

DRIVEWAY APRON
(RESIDENTIAL - ONE OR TWO FAMILY)

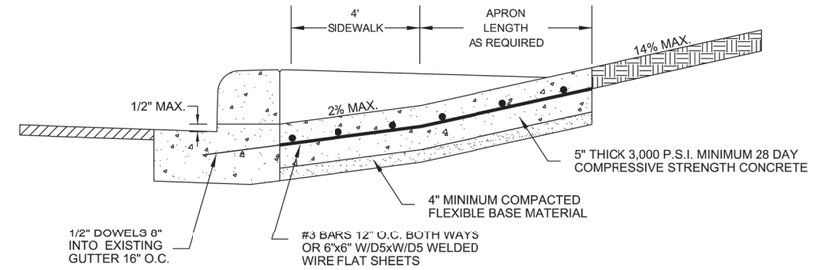

STRUCTURAL SECTION

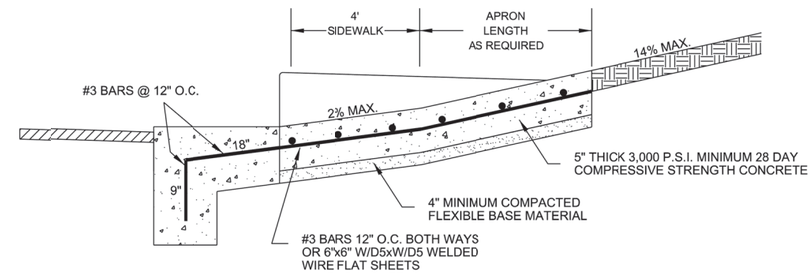

NO EXISTING CURB STRUCTURAL SECTION

NOTES:

1. WHERE GUTTER DOES NOT EXIST DRIVEWAY APRON SHALL EXTEND TO EDGE OF ASPHALT AND SHALL HAVE A MINIMUM 6" WIDE 1' DEEP GRADE BEAM MONOLITHIC AND REINFORCED SIMILAR TO APRON.
2. PLACEMENT OF SIDEWALK SHOWN IS TYPICAL; HOWEVER, ALTERNATIVE SIDEWALK PLACEMENT COMMON TO DRIVEWAY APRON WILL BE CONSIDERED PROVIDED CROSS SLOPE OF SIDEWALK IS NO GREATER THAN 2%.
3. CURB CUT LENGTH NO GREATER THAN AS REQUIRED TO MATCH SLOPE OF ADJACENT SIDEWALK.
4. DUMMY JOINTS TO BE PROVIDED AT MINIMUM 4-FT. INTERVALS PERPENDICULAR TO THE CURB LINE WITHIN THE SIDEWALK AREA AND PARALLEL TO THE SIDEWALK AREA.
5. PROVIDE A MINIMUM 7" HIGH POINT. HIGH POINT HEIGHT SHALL BE MEASURED FROM THE GUTTER FLOW LINE TO THE DRIVEWAY APRON. NOTE HIGH POINT MAY OCCUR OUTSIDE OF ROW.
6. DRIVEWAY THROAT TRANSITION MAY OCCUR OUTSIDE OF ROW.
7. PROVIDE EXPANSION JOINTS AT ALL SIDEWALK AND DRIVEWAY THROAT JOINTS. EXPANSION JOINTS SHALL BE PLACED USING 1/2" ASPHALTIC MATERIAL WITH 1/2" DOWELS 16" O.C.
8. THE TANGENT POINT OF THE DRIVEWAY CURB RETURN AT THE PUBLIC ROADWAY LINE OR FLARE SHALL BE A MINIMUM DISTANCE OF 1' OFF THE PROPERTY PROJECTED PERPENDICULAR TO THE STREET CENTERLINE, EXCEPT SINGLE FAMILY OR ZERO LOT LINE LOTS. ON SINGLE FAMILY ZERO LOT LINE LOTS WHERE THE DRIVE IS ON THE ZERO LOT LINE, THE TANGENT POINT OR FLARE SHALL BE NO GREATER THAN 3' BEYOND THE ADJOINING PROPERTY LINE PROJECTED PERPENDICULAR TO THE STREET CENTERLINE.

DATE APPROVED: 04/2016	DWG. NO: ST-014.2	SCALE: N.T.S.
DRAWN BY: RAS	SHEET: 2 OF 2	
FILENAME: DRIVEWAY (RESIDENTIAL - ONE OR TWO FAMILY)		

City of New Braunfels — ENGINEERING DEPARTMENT

GENERAL NOTES

1. OBTAIN AND COMPLY WITH ALL APPLICABLE CITY, COUNTY, STATE, AND FEDERAL PERMITS AND APPROVALS, WITH ASSISTANCE FROM ENGINEER, IF NECESSARY. OBTAIN PERMIT (CERTIFICATION) FROM HARRIS COUNTY ENGINEER TO ENTER HARRIS COUNTY FLOOD CONTROL DISTRICT RIGHT-OF-WAY.
2. ESTABLISH TURF GRASS ON ALL DISTURBED AREAS. MINIMUM ACCEPTANCE CRITERIA ARE 75% COVERAGE OF ESTABLISHED VEGETATION AS PER THE PLANTING SHEETS AND NO EROSION OR RILLS DEEPER THAN 4".
3. CONTRACTOR SHALL FIELD VERIFY EXISTING CONDITIONS BEFORE BEGINNING CONSTRUCTION.
4. THE CONTRACTOR IS RESPONSIBLE FOR PROVIDING SECURITY TO PROTECT THE PROJECT SITE, CONTRACTOR PROPERTY, EQUIPMENT, AND WORK.
5. THE CONTRACTOR IS RESPONSIBLE FOR CLEANING STREETS OF CONSTRUCTION DIRT AND DEBRIS AT CLOSE OF EACH WORK DAY.
6. THE CONDITION OF THE ROAD AND/OR RIGHT-OF-WAY, UPON COMPLETION OF THE JOB SHALL BE AS GOOD AS OR BETTER THAN PRIOR TO STARTING WORK.
7. PRIOR TO CONSTRUCTION, THE CONTRACTOR, ALONG WITH CONCURRENCE FROM THE FIELD ENGINEER, SHALL DETERMINE HIS/HER LAY-DOWN AND/OR STAGING AREA LOCATIONS.
8. THE CONTRACTOR SHALL NOTIFY ALL PROPERTY OWNERS A MINIMUM OF 24 HOURS PRIOR TO BLOCKING DRIVEWAYS OR ENTERING UTILITY EASEMENTS.
9. TRAFFIC INGRESS AND EGRESS FOR DRIVEWAYS AND PEDESTRIAN ACCESS FACILITIES SHALL BE MAINTAINED THROUGHOUT CONSTRUCTION.
10. THE CONTRACTOR SHALL COORDINATE WITH ENGINEER PRIOR TO REMOVAL OF ANY FENCES, POSTS, MAILBOXES, PLANTERS, PERMANENT TRASH CONTAINERS, CULVERTS, ETC. OR SECTIONS THEREOF, THAT ENCROACH WITHIN THE RIGHT-OF-WAY.
11. CONTRACTOR SHALL PROTECT ALL MANHOLE COVERS, VALVE COVERS, VAULT LIDS, FIRE HYDRANTS, POWER POLES, GUY WIRES, AND TELEPHONE BOXES THAT ARE TO REMAIN IN PLACE AND UNDISTURBED DURING CONSTRUCTION.
12. ALL EXISTING CONCRETE PAVING, SIDEWALK, AND CURB DEMOLITION SHALL BE REMOVED AND DISPOSED OF BY CONTRACTOR. DISPOSAL SHALL BE AT AN APPROVED OFF-SITE, LAWFUL LOCATION, UNLESS DIRECTED OTHERWISE BY THE OWNER.
13. ITEMS REMOVED OR DAMAGED WITHIN THE PROJECT RIGHT-OF-WAY, DESIGNATED TO REMAIN, SHALL BE REPLACED WITH LIKE-KIND OR BETTER AT THE CONTRACTOR'S EXPENSE.
14. TREES, BUSHES, SHRUBBERY AND OTHER DAMAGED PLANTINGS DESIGNATED TO REMAIN SHALL BE REPLACED WITHIN 72 HOURS OF REMOVAL AND ARE TO BE THOROUGHLY WATERED-IN. NO SEPARATE PAY.
15. PAVED SURFACES, PAVEMENT MARKERS AND MARKINGS SHALL BE PROTECTED FROM DAMAGE BY TRACKED EQUIPMENT.
16. IRON RODS DISTURBED DURING CONSTRUCTION ARE TO BE REPLACED BY A REGISTERED PROFESSIONAL LAND SURVEYOR FOR THE ORIGINAL PROPERTY OWNER AT NO SEPARATE PAY.
17. CONSTRUCTION STAKING WILL BE PROVIDED BY THE CONTRACTOR. TWO COPIES OF STAKING NOTES TO BE PROVIDED TO THE ENGINEER PRIOR TO CONSTRUCTION.
18. THE COUNTY OR THE COUNTY'S SURVEYOR SHALL PROVIDE A BENCHMARK OR TEMPORARY BENCHMARK AND SURVEY CONTROLS.

REV	DESCRIPTION	DATE	APPR
0	ISSUED FOR BID	02/12/24	AG

DRIVEWAY DETAILS 1

COMMON STREET PEDESTRIAN IMPROVEMENTS

CITY OF NEW BRAUNFELS
550 Landa Street | New Braunfels, TX 78130

DESIGN BY: KM
DRAWN BY: EFC
CHECKED BY: JB
APPROVED BY: AG

City of New Braunfels

ENGINEER:
THE GOODMAN CORPORATION
3200 TRAVIS, SUITE 200
HOUSTON, TEXAS 77006
www.TheGoodmanCorp.com
(713) 951-7951
TBPELS Firm Registration No. 19990

SURVEYOR:
MBCO ENGINEERING + SURVEYING

STATE OF TEXAS
ASHISH GHOSH
111103
LICENSED
PROFESSIONAL ENGINEER
2/13/2024

DATE: 02/12/2024
SCALE: AS NOTED

SHEET NUMBER
51 OF 97

W:\00_TGC Project Files\NBR100\CAD\NBR109_GENERAL.dwg, 2/12/2024

DRIVEWAY APRON
(COMMERCIAL - MULTIFAMILY - INDUSTRIAL)
(RADIAL/FLARED)

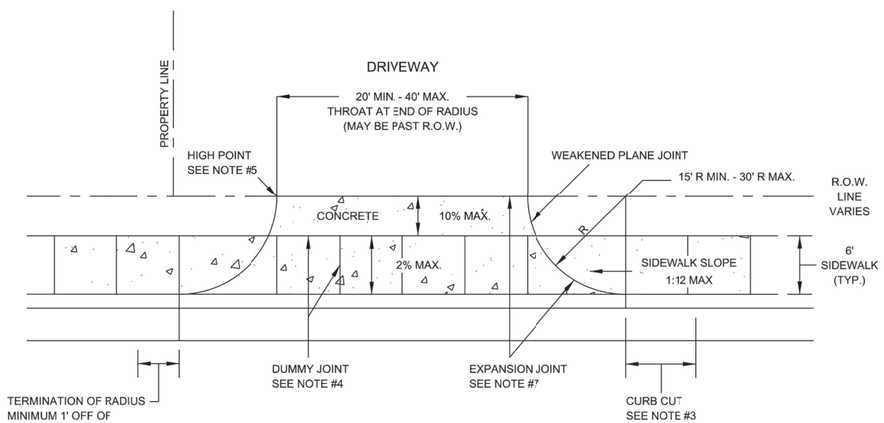

RADIUS PLAN VIEW

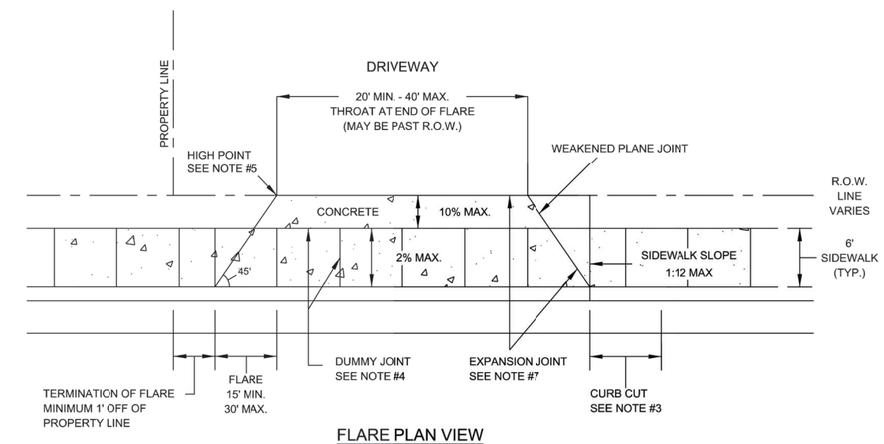

FLARE PLAN VIEW

DATE APPROVED: 07/2008	DWG. NO: ST-015.1	SCALE: N.T.S.	City of New Braunfels — ENGINEERING DEPARTMENT
DRAWN BY: RAS	SHEET: 1 OF 2		
FILENAME: DRIVEWAY (COMMERCIAL - MULTIFAMILY - INDUSTRIAL)			

DRIVEWAY APRON
(COMMERCIAL - MULTIFAMILY - INDUSTRIAL)

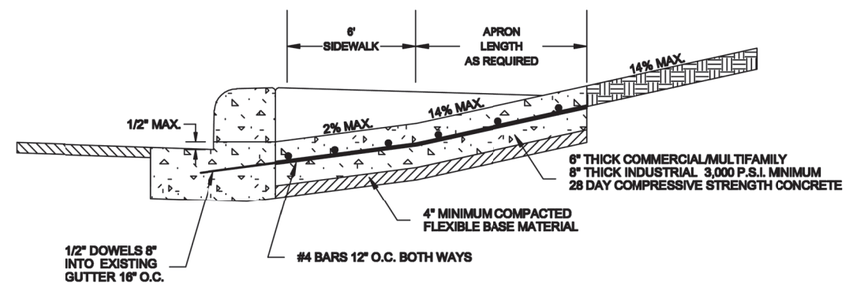

STRUCTURAL SECTION

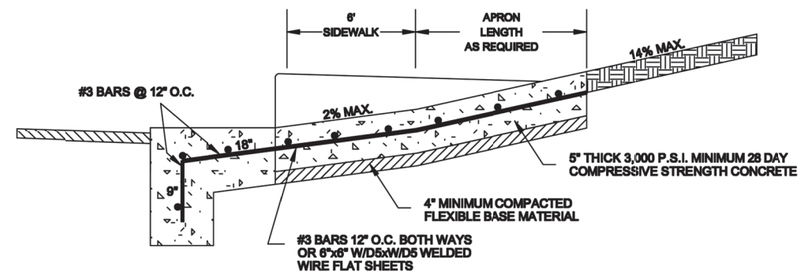

NO EXISTING CURB STRUCTURAL SECTION

NOTES:

1. WHERE GUTTER DOES NOT EXIST DRIVEWAY APRON SHALL EXTEND TO EDGE OF ASPHALT AND SHALL HAVE A MINIMUM 6" WIDE 1' DEEP GRADE BEAM MONOLITHIC AND REINFORCED SIMILAR TO APRON.
2. PLACEMENT OF SIDEWALK SHOWN IS TYPICAL; HOWEVER, ALTERNATIVE SIDEWALK PLACEMENT COMMON TO DRIVEWAY APRON WILL BE CONSIDERED PROVIDED CROSS SLOPE OF SIDEWALK IS NO GREATER THAN 2%.
3. CURB CUT LENGTH NO GREATER THAN AS REQUIRED TO MATCH SLOPE OF ADJACENT SIDEWALK.
4. DUMMY JOINTS TO BE PROVIDED AT MINIMUM 4-FT. INTERVALS PERPENDICULAR TO THE CURB LINE WITHIN THE SIDEWALK AREA AND PARALLEL TO THE SIDEWALK AREA.
5. PROVIDE A MINIMUM 7" HIGH POINT. HIGH POINT HEIGHT SHALL BE MEASURED FROM THE GUTTER FLOW LINE TO THE DRIVEWAY APRON. NOTE HIGH POINT MAY OCCUR OUTSIDE OF ROW.
6. DRIVEWAY THROAT TRANSITION MAY OCCUR OUTSIDE OF ROW.
7. PROVIDE EXPANSION JOINTS AT ALL SIDEWALK AND DRIVEWAY THROAT JOINTS. EXPANSION JOINTS SHALL BE PLACED USING 1/2" ASPHALTIC MATERIAL WITH 1/2" DOWELS 16" O.C.
8. ALL SIDEWALK AND DRIVEWAY CONSTRUCTION SHALL MEET A.D.A. SPECIFICATIONS.

DATE APPROVED: 7/08	DWG. NO: ST-015.2	SCALE: N.T.S.	City of New Braunfels — ENGINEERING DEPARTMENT
DRAWN BY: RAS	SHEET: 2 OF 2		
FILENAME: DRIVEWAY (Commercial - Multifamily - Industrial)			
P:\CURRENT NEW BRAUNFELS DETAILS\2006\			

GENERAL NOTES

1. OBTAIN AND COMPLY WITH ALL APPLICABLE CITY, COUNTY, STATE, AND FEDERAL PERMITS AND APPROVALS, WITH ASSISTANCE FROM ENGINEER, IF NECESSARY. OBTAIN PERMIT (CERTIFICATION) FROM HARRIS COUNTY ENGINEER TO ENTER HARRIS COUNTY FLOOD CONTROL DISTRICT RIGHT-OF-WAY.
2. ESTABLISH TURF GRASS ON ALL DISTURBED AREAS. MINIMUM ACCEPTANCE CRITERIA ARE 75% COVERAGE OF ESTABLISHED VEGETATION AS PER THE PLANTING SHEETS AND NO EROSION OR RILLS DEEPER THAN 4".
3. CONTRACTOR SHALL FIELD VERIFY EXISTING CONDITIONS BEFORE BEGINNING CONSTRUCTION.
4. THE CONTRACTOR IS RESPONSIBLE FOR PROVIDING SECURITY TO PROTECT THE PROJECT SITE, CONTRACTOR PROPERTY, EQUIPMENT, AND WORK.
5. THE CONTRACTOR IS RESPONSIBLE FOR CLEANING STREETS OF CONSTRUCTION DIRT AND DEBRIS AT CLOSE OF EACH WORK DAY.
6. THE CONDITION OF THE ROAD AND/OR RIGHT-OF-WAY, UPON COMPLETION OF THE JOB SHALL BE AS GOOD AS OR BETTER THAN PRIOR TO STARTING WORK.
7. PRIOR TO CONSTRUCTION, THE CONTRACTOR, ALONG WITH CONCURRENCE FROM THE FIELD ENGINEER, SHALL DETERMINE HIS/HER LAY-DOWN AND/OR STAGING AREA LOCATIONS.
8. THE CONTRACTOR SHALL NOTIFY ALL PROPERTY OWNERS A MINIMUM OF 24 HOURS PRIOR TO BLOCKING DRIVEWAYS OR ENTERING UTILITY EASEMENTS.
9. TRAFFIC INGRESS AND EGRESS FOR DRIVEWAYS AND PEDESTRIAN ACCESS FACILITIES SHALL BE MAINTAINED THROUGHOUT CONSTRUCTION.
10. THE CONTRACTOR SHALL COORDINATE WITH ENGINEER PRIOR TO REMOVAL OF ANY FENCES, POSTS, MAILBOXES, PLANTERS, PERMANENT TRASH CONTAINERS, CULVERTS, ETC. OR SECTIONS THEREOF, THAT ENCROACH WITHIN THE RIGHT-OF-WAY.
11. CONTRACTOR SHALL PROTECT ALL MANHOLE COVERS, VALVE COVERS, VAULT LIDS, FIRE HYDRANTS, POWER POLES, GUY WIRES, AND TELEPHONE BOXES THAT ARE TO REMAIN IN PLACE AND UNDISTURBED DURING CONSTRUCTION.
12. ALL EXISTING CONCRETE PAVING, SIDEWALK, AND CURB DEMOLITION SHALL BE REMOVED AND DISPOSED OF BY CONTRACTOR. DISPOSAL SHALL BE AT AN APPROVED OFF-SITE, LAWFUL LOCATION, UNLESS DIRECTED OTHERWISE BY THE OWNER.
13. ITEMS REMOVED OR DAMAGED WITHIN THE PROJECT RIGHT-OF-WAY, DESIGNATED TO REMAIN, SHALL BE REPLACED WITH LIKE-KIND OR BETTER AT THE CONTRACTOR'S EXPENSE.
14. TREES, BUSHES, SHRUBBERY AND OTHER DAMAGED PLANTINGS DESIGNATED TO REMAIN SHALL BE REPLACED WITHIN 72 HOURS OF REMOVAL AND ARE TO BE THOROUGHLY WATERED-IN. NO SEPARATE PAY.
15. PAVED SURFACES, PAVEMENT MARKERS AND MARKINGS SHALL BE PROTECTED FROM DAMAGE BY TRACKED EQUIPMENT.
16. IRON RODS DISTURBED DURING CONSTRUCTION ARE TO BE REPLACED BY A REGISTERED PROFESSIONAL LAND SURVEYOR FOR THE ORIGINAL PROPERTY OWNER AT NO SEPARATE PAY.
17. CONSTRUCTION STAKING WILL BE PROVIDED BY THE CONTRACTOR. TWO COPIES OF STAKING NOTES TO BE PROVIDED TO THE ENGINEER PRIOR TO CONSTRUCTION.
18. THE COUNTY OR THE COUNTY'S SURVEYOR SHALL PROVIDE A BENCHMARK OR TEMPORARY BENCHMARK AND SURVEY CONTROLS.

REV	DESCRIPTION	DATE	APPR
0	ISSUED FOR BID	02/12/24	AG

DRIVEWAY DETAILS 2

COMMON STREET PEDESTRIAN IMPROVEMENTS

CITY OF NEW BRAUNFELS
550 Landa Street | New Braunfels, TX 78130

DESIGN BY: KM
DRAWN BY: EFC
CHECKED BY: JB
APPROVED BY: AG

City of New Braunfels

ENGINEER:
THE GOODMAN CORPORATION
3200 TRAVIS, SUITE 200
HOUSTON, TEXAS 77006
www.TheGoodmanCorp.com
(713) 951-7951
TBPELS Firm Registration No. 19990

SURVEYOR:
MBCO ENGINEERING + SURVEYING

STATE OF TEXAS
ASHISH GHOSH
111103
LICENSED
PROFESSIONAL ENGINEER
2/13/2024

DATE: 02/12/2024
SCALE: AS NOTED

SHEET NUMBER
52 OF 97

W:\00_TGC Project Files\NBR100\CAD\NBR109_GENERAL.dwg, 2/12/2024

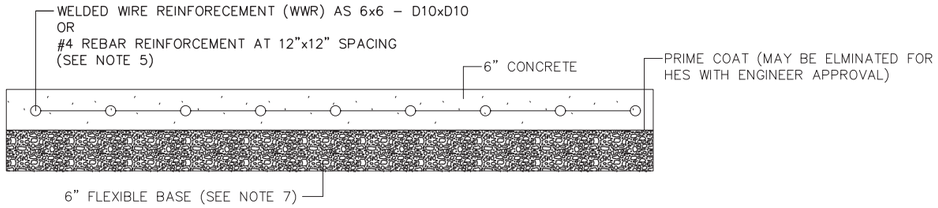

TYPICAL CONCRETE DRIVEWAY

* NOTE: STEEL SHALL BE CENTERED VERTICALLY IN CONCRETE.
PAID AS 'DRIVEWAYS CONC (HES)' OR 'DRIVEWAYS (CONC)'

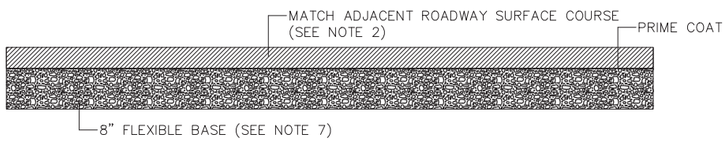

TYPICAL ROADWAY DRIVEWAY (TYPE 1)

PAID AS DRIVEWAYS ACP (TYPE 1)

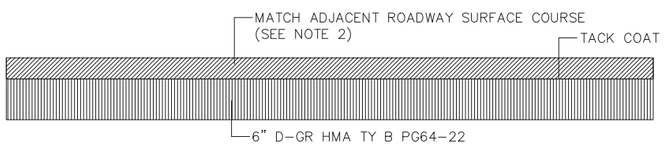

TYPICAL ROADWAY DRIVEWAY (TYPE 2)

PAID AS DRIVEWAYS ACP (TYPE 2)

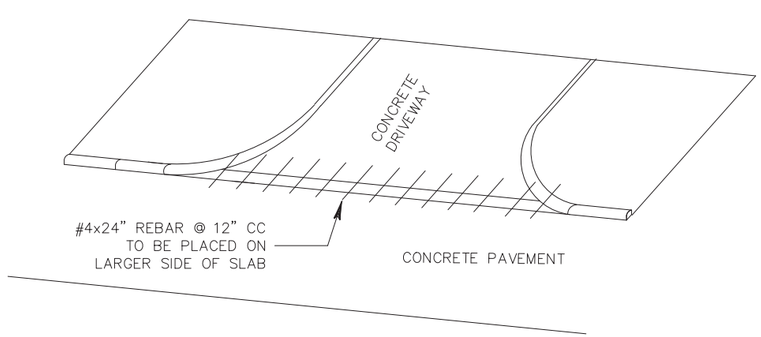

TIE BAR PLACEMENT WITH CRCP

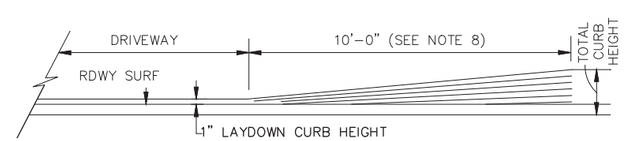

LAYDOWN CURB AT DRIVEWAYS DETAIL

NOTES:

1. USE CLASS A CONCRETE UNLESS OTHERWISE NOTED.
2. DENSE GRADED HMA MAY BE USED WHEN APPROVED BY THE ENGINEER IF THE ROADWAY SURFACE COURSE IS A PERFORMANCE MIX.
3. REFER TO PLAN SHEETS FOR GEOMETRIC DESIGN DETAILS.
4. FOR CONCRETE DRIVEWAYS, PROVIDE EXPANSION JOINT 20 FT C-C FOR WIDTH OR LENGTH OVER 25 FT.
5. FIBER REINFORCEMENT IS NOT ALLOWED.
6. MACHINE LAID HMA IS REQUIRED UNLESS OTHERWISE APPROVED BY THE ENGINEER.
7. FURNISH BASE MEETING THE REQUIREMENTS FOR ANY TYPE OF GRADE IN ACCORDANCE WITH ITEM 247. FLEXIBLE BASE COMPRESSIVE STRENGTHS ARE WAIVED. BASE IS SUBSIDIARY TO THE ITEM.
8. WHERE SIDEWALK IS PRESENT, SLOPE AND LENGTH OF CURB TRANSITION SHOULD MATCH THE SIDEWALK AND MEET ADA REQUIREMENTS.
9. IF ROOTS ARE ENCOUNTERED VERIFY WITH THE ENGINEER PRIOR TO ACCOMMODATING OR REMOVING 2 IN. DIAMETER OR LARGER ROOTS. ROOT REMOVAL MUST BE IN ACCORDANCE WITH ITEM 752.4.2. ROOTS MAY REMAIN IN THE BASE. FOR IMPROVEMENTS WITHIN 6 IN. OF A ROOT, THE CONCRETE THICKNESS MAY BE REDUCED BY 1 IN. AND THE BASE INCREASED BY 1 IN. TO MINIMIZE THE IMPACT TO THE ROOTS. ADJUST BASE AND SURFACE PROFILE TO PROVIDE A 1 IN. BASE CUSHION AROUND THE ROOTS. THE SURFACE PROFILE MAY BE ADJUSTED TO THE EXTENT ALLOWED BY ADA. THIS WORK IS SUBSIDIARY.

© 2020
Texas Department of Transportation
San Antonio District

DRIVEWAY DETAILS

San Antonio District Standard
Sheet (1 of 1)

T:Engdata/Standards/Drivewaydetails.dgn	PREPARED BY AND FOR USE OF TxDoT.					
ORIGINAL DRAWING DATE: 8/1/2020	STATE DISTRICT	FEDERAL REGION	FEDERAL AID PROJECT #			SHEET
REVISIONS	SAT	6				53 OF 97
	COUNTY		CONTROL	SECTION	JOB	HIGHWAY
	COMAL		0915	17	076	COMMON ST

2/8/2024
W:\00_TGC Project Files\NBR100\CAD\NBR100_GENERAL.dwg

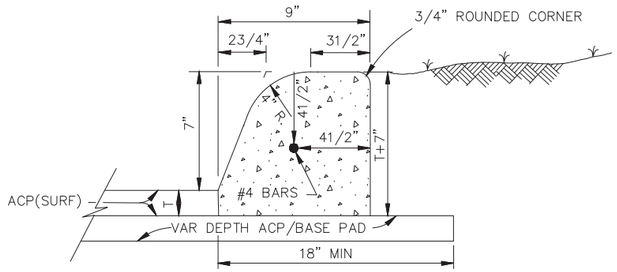

CONCRETE CURB (TYPE 1)

W/ ACP

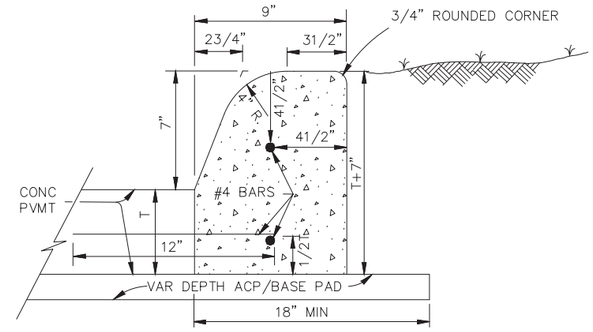

CONCRETE CURB (TYPE 1)

W/ CONC PAVEMENT

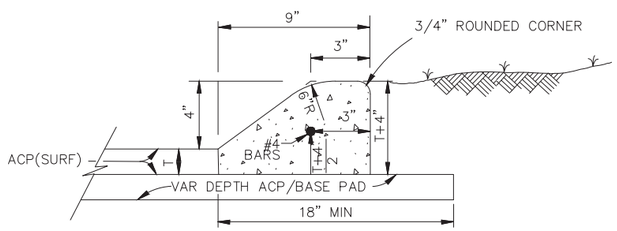

CONCRETE CURB (TYPE 2)

W/ ACP

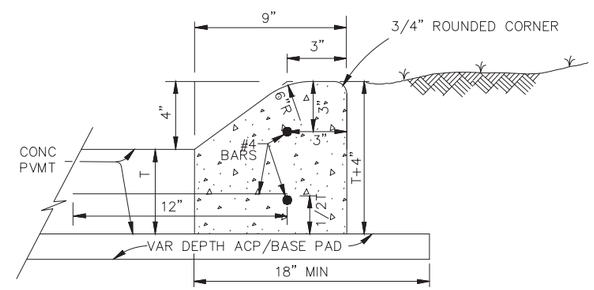

CONCRETE CURB (TYPE 2)

W/ CONC PAVEMENT

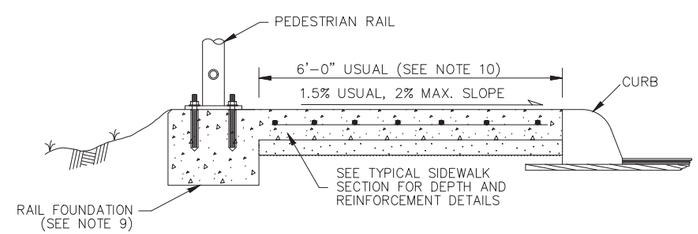

TYPICAL SIDEWALK SECTION
WITH PEDESTRIAN RAIL

GENERAL NOTES:

1. CONCRETE CURB TYPE 1 AND 2 SHOWN SHALL MEET THE MINIMUM SPECIFICATION REQUIREMENTS OF CLASS "A" CONCRETE PER ITEM 529 AND 421.
2. ALL REINFORCING STEEL SHALL BE GRADE 60
3. WHERE CONCRETE CURB IS PLACED ON EXISTING CONCRETE PAVEMENT, THE PAVEMENT SHALL BE DRILLED AND THE REINFORCING BARS GROUTED IN PLACE.
4. EXPANSION AND CONTRACTION JOINTS SHALL BE CONSTRUCTED TO MATCH PAVEMENT JOINTS IN ALL CURBS AND CURB AND GUTTER ADJACENT TO JOINTED CONCRETE PAVEMENT. WHERE PLACEMENT OF CURB OR CURB AND GUTTER IS NOT ADJACENT TO CONCRETE PAVEMENT, EXPANSION JOINTS SHALL BE PROVIDED AT STRUCTURES, CURB RETURNS AT STREETS, AND AT LOCATIONS DIRECTED BY THE ENGINEER..
5. VERTICAL AND HORIZONTAL DOWEL BARS AND TRANSVERSE REINFORCING BARS SHALL BE PLACED AT 4 FEET C-C, UNLESS OTHERWISE SHOWN.
6. ONE-HALF INCH EXPANSION JOINT MATERIAL SHALL BE PROVIDED WHERE CURB OR CURB AND GUTTER IS ADJACENT TO SIDEWALK OR RIPRAP. THIS IS SUBSIDIARY TO THE CURB, ITEM 529.
7. LAYDOWN CURB AT DRIVEWAYS WILL BE PAID AS SUBSIDIARY TO ITEM 530.
8. FOR SIDEWALK DETAILS AT DRIVEWAYS, SEE SAN ANTONIO DISTRICT STANDARD "DRIVEWAY DETAILS".
9. SEE PEDESTRIAN HANDRAIL DETAILS STANDARD "PRD" FOR MORE INFORMATION. CONCRETE RAIL FOUNDATION TO BE POURED WITH THE SIDEWALK BUT PAYMENT IS SUBSIDIARY TO ITEM 450 "RAILING".
10. CLEAR SIDEWALK WIDTH EXCLUDING THE PEDESTRIAN RAIL FOUNDATION SHALL BE 6' UNLESS OTHERWISE SPECIFIED IN THE PLANS.

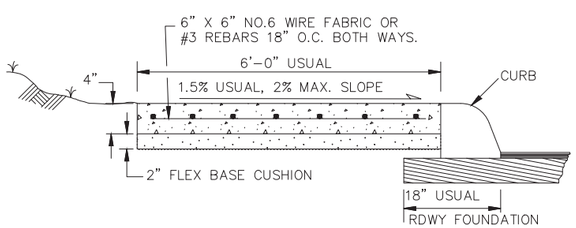

TYPICAL SIDEWALK SECTION

GROOVED JOINTS IN THE SIDE WALK SHALL BE AT A MAX. SPACING OF 10 FT. AND SHALL HAVE 3/4" EXPANSION JOINTS AT A MAX. SPACING OF 60' AND TO COINSIDE WITH THE CURB EXP. JOINTS.

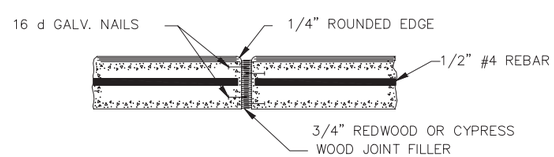

TYPICAL CURB EXPANSION JOINT DETAIL

EXPANSION JOINTS TO BE PLACED AT BEGINNING AND END OF CURVES, DRIVEWAYS WHEELCHAIR RAMPS, INLETS, ILLUMINATION/ SIGNAL FOUNDATIONS AND OTHER FIXED OBJECTS.

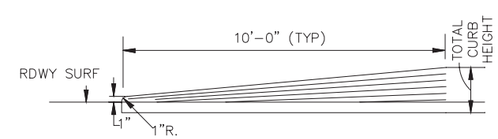

TRANSITION FOR CONCRETE CURB ENDS

SEE CURB DETAIL FOR REINFORCEMENT

© 2020

Texas Department of Transportation
San Antonio District

MISCELLANEOUS CURB AND SIDEWALK DETAILS

San Antonio District Standard
Sheet (1 of 2)

T:Engdata/Standards/MiscCurbdetails.dgn

ORIGINAL DRAWING DATE:

REVISIONS
09-01-08
10-10-17 sidewalk width equals 6' usual
07-22-20 9" curb + curb w/ conc pvmt det.

PREPARED BY AND FOR USE OF TxDoT.

STATE DISTRICT	FEDERAL REGION	FEDERAL AID PROJECT #	SHEET
SAT	6		54 OF 97

COUNTY	CONTROL	SECTION	JOB	HIGHWAY
COMAL	0915	17	076	COMMON ST

2/8/2024
W:\00_TGC Project Files\NBR100\CAD\NBR100_GENERAL.dwg

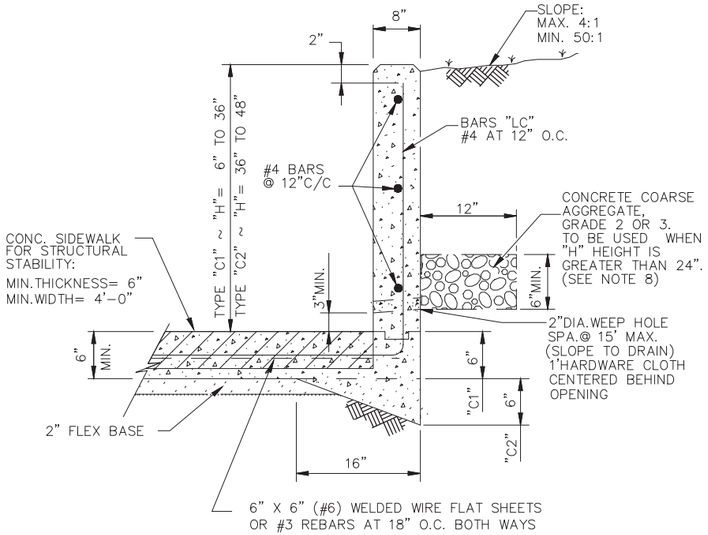

TYPE "C1" & "C2" CURB

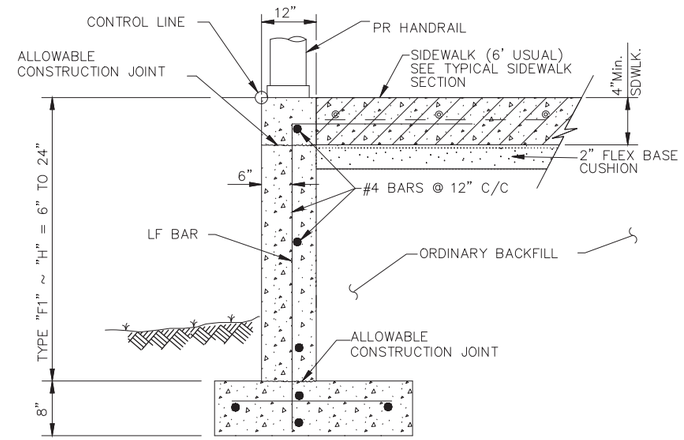

TYPE "F1" CURB

GENERAL NOTES:

1. CONCRETE FOR CURB TYPE F AND C SHOWN SHALL MEET THE MINIMUM SPECIFICATION REQUIREMENTS OF CLASS "C" CONCRETE PER ITEM 421
2. ALL REINFORCING STEEL SHALL BE GRADE 60
3. EXPANSION AND CONTRACTION JOINTS SHALL BE CONSTRUCTED TO MATCH PAVEMENT JOINITS IN ALL CURBS AND CURB AND GUTTER ADJACENT TO JOINTED CONCRETE PAVEMENT. WHERE PLACEMENT OF CURB OR CURB AND GUTTER IS NOT ADJACENT TO CONCRETE PAVEMENT, EXPANSION JOINTS SHALL BE PROVIDED AT STRUCTURES, CURB RETURNS AT STREETS, AND AT LOCATIONS DIRECTED BY THE ENGINEER.
4. VERTICAL AND HORIZONTAL DOWEL BARS AND TRANSVERSE REINFORCING BARS SHALL BE PLACED AT 4 FEET C-C, UNLESS OTHERWISE SHOWN.
5. UNTIL THE SIDEWALK IS COMPLETE, LATERAL SUPPORT FOR THE "F" CURBS WILL BE REQUIRED.
6. IF AGGREGATE IS REQUIRED PER THE DETAIL, IT IS PAID AS SUBSIDIARY TO THE CURB, ITEM 529.

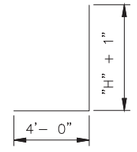

BAR "LC"

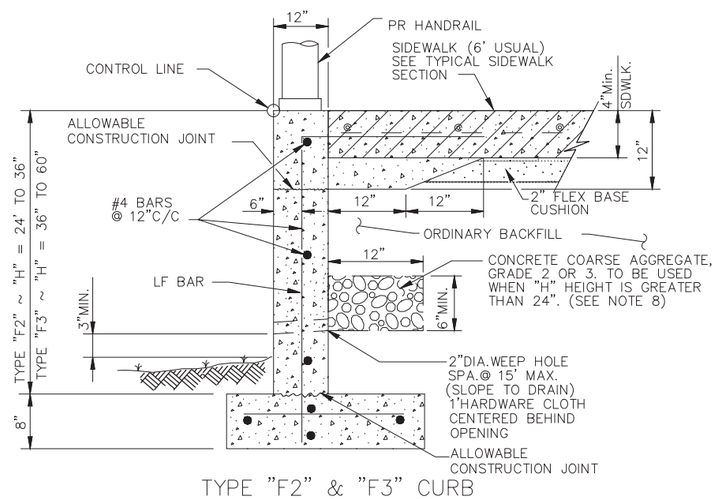

TYPE "F2" & "F3" CURB

DESIGN SOIL PARAMETERS:
Soil Unit Wt.= 120 pcf
Phi = 30 Degrees
Cohesion = 50 psf
Min. PI = 15
Max. PI = 30
SURCHARGE:
TYPE F CURB q = 2' Adjacent to sidewalk
Max. slope behind TYPE C Curb = 4:1
Min. Factor of Safety against sliding is 1.5.
Designed in accordance with current AASHTO Standards and Interim Specifications.

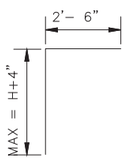

BAR "LF"

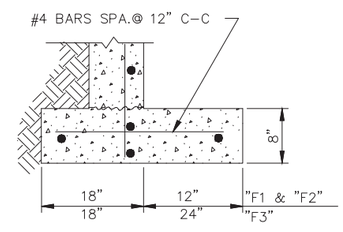

FOOTING DETAIL

CLASS C CONCRETE PAID UNDER ITEM 531, SIDEWALK. (NOTE. ADDITIONAL CONCRETE TO MEET THE THICKENED SECTIONS REQUIRED BY THESE DETAILS IS SUBSIDIARY TO ITEM 531, CURB.)

© 2020

Texas Department of Transportation
San Antonio District

MISCELLANEOUS CURB AND SIDEWALK DETAILS

San Antonio District Standard
Sheet (2 of 2)

T:Engdata/Standards/MiscCurbdetails.dgn

ORIGINAL DRAWING DATE:

REVISIONS
09-01-08
10-10-17 sidewalk width equals 6' usual
07-22-20 9" curb + curb w/ conc pvmt det.
- -

PREPARED BY AND FOR USE OF TxDoT.

STATE DISTRICT	FEDERAL REGION	FEDERAL AID PROJECT	SHEET
SAT	6		55 OF 97

COUNTY	CONTROL	SECTION	JOB	HIGHWAY
COMAL	0915	17	076	COMMON ST

2/8/2024
W:\00_TGC Project Files\NBR100\CAD\NBR100_GENERAL.dwg

DISCLAIMER: The use of this standard is governed by the "Texas Engineering Practice Act". No warranty of any kind is made by TxDOT for any purpose whatsoever. TxDOT assumes no responsibility for the conversion of this standard to other formats or for incorrect results or damages resulting from its use.

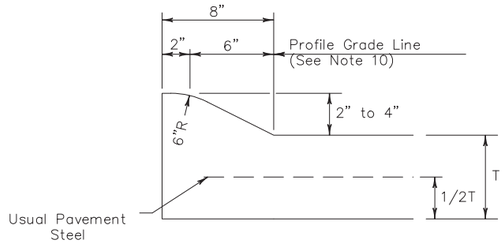

TYPE I CURB (MONOLITHIC)
2" – 4" HEIGHT

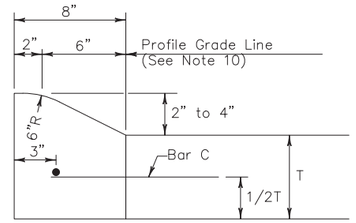

TYPE I CURB
2" – 4" HEIGHT

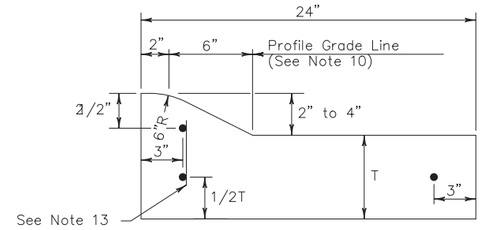

TYPE I CURB AND GUTTER
2" – 4" HEIGHT

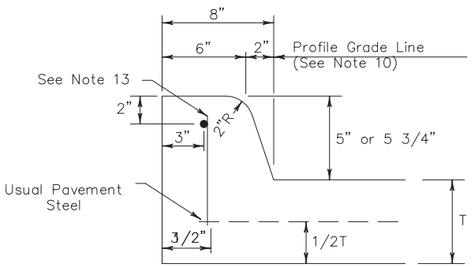

TYPE II CURB (MONOLITHIC)
5" – 5 3/4" HEIGHT

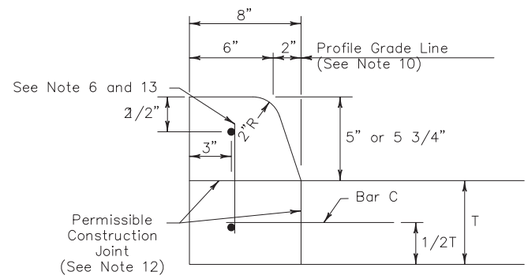

TYPE II CURB
5" – 5 3/4" HEIGHT

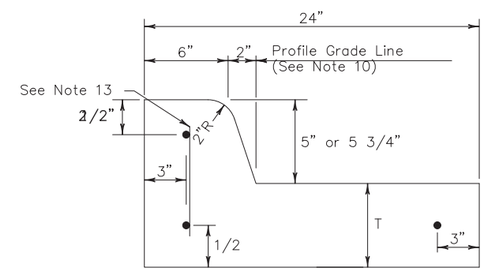

TYPE II CURB AND GUTTER
5" – 5 3/4" HEIGHT

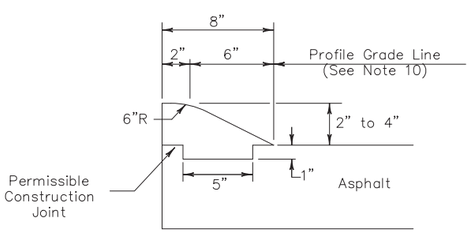

TYPE III CURB (KEYED)
2" – 4" HEIGHT

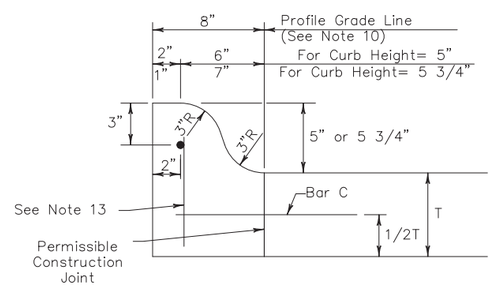

TYPE IIa CURB
5" – 5 3/4" HEIGHT

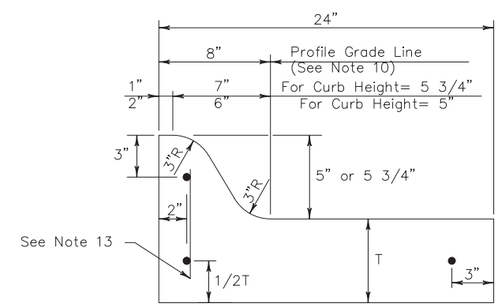

TYPE IIa CURB AND GUTTER
5" – 5 3/4" HEIGHT

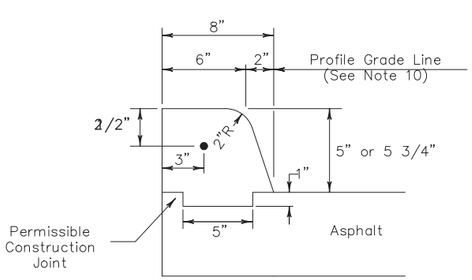

TYPE IV CURB (KEYED)
5" – 5 3/4" HEIGHT

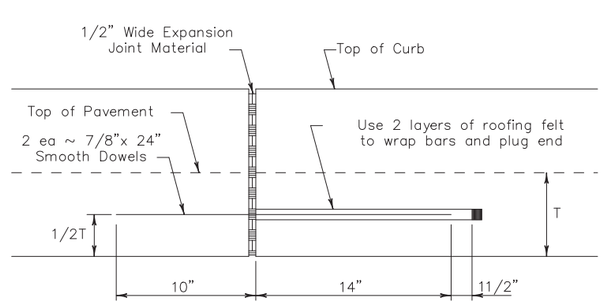

EXPANSION JOINT DETAIL

CURB TRANSITION NOTE:
Field conditions may require a longer or shorter transition, and shall be shown elsewhere in the plans,or as directed by the Engineer.

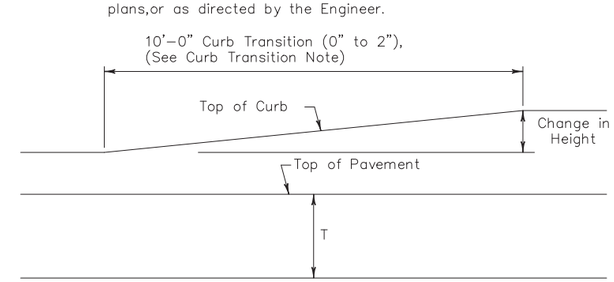

CURB TRANSITION
Note: To be paid for as Highest Curb

GENERAL NOTES

1. All materials and construction shall be in accordance with Item 529, "Concrete Curb, Gutter, and Combined Curb and Gutter."
2. Concrete shall be Class A.
3. When reinforcing bars are used, they shall be No.4 unless otherwise shown. The use of fiber reinforced concrete in lieu of reinforcing steel is acceptable. Use fibers meeting the requirements of DMS 4550, "Fibers for Concrete," and dose fibers in accordance with Material Producers List (MPL) "Fibers for Class A and B Concrete Applications."
4. Round exposed sharp edges with a rounding tool, to a minimum radius of 1/4 inch.
5. All existing curbs and driveways to be removed shall be sawed or removed at existing joints.
6. Where concrete curb is to be placed on existing concrete pavement, Bar B may be drilled and grouted in place, or may be inserted into fresh concrete.
7. Expansion and contraction joints shall be constructed to match pavement joints in all curbs and curb and gutter adjacent to jointed concrete pavement. Where placement of curb or curb and gutter is not adjacent to concrete pavement, expansion joints shall be provided at structures, curb returns at streets, and at locations directed by The Engineer.
8. Vertical and horizontal dowel bars and transverse reinforcing bars shall be placed at four feet C~C.
9. Dimension 'T' shown is the thickness of concrete pavement. When curb is installed adjacent to flexible pavement dimension 'T' is 8" maximum.
10. Usual profile grade line. Refer to typical sections and plan–profile sheets for exact locations.
11. One–half inch expansion joint material shall be provided where curb or curb and gutter is adjacent to sidewalk or riprap.
12. When horizontal permissible construction joints are used, the longitudinal pavement steel shall be placed in accordance with pavement details shown elsewhere in the plans. Reinforcing steel for curb section shall then conform to that required for concrete curb.
13. Bar B placement as needed (typically at four ft. C–C) to support curb reinforcing steel during concrete placement.

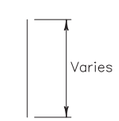

BAR B

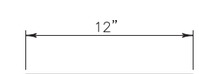

BAR C

Texas Department of Transportation

Design Division Standard

CONCRETE CURB AND CURB AND GUTTER

CCCG–22

FILE: cccg21.dgn	DN: TXDOT	CK: AN	DW: CS	CK: KM
©TxDOT: JUNE 2022	CONT	SECT	JOB	HIGHWAY
REVISIONS	0915	17	076	COMMON ST
	DIST		COUNTY	SHEET NO.
	SAT		COMAL	56 OF 97

DATE: 2/8/2024
FILE: W:\00_TGC Project Files\NBR100\CAD\NBR100_GENERAL.dwg

DISCLAIMER:
The use of this standard is governed by the "Texas Engineering Practice Act". No warranty of any kind is made by TxDOT for any purpose whatsoever. TxDOT assumes no responsibility for the conversion of this standard to other formats or for incorrect results or damages resulting from its use.

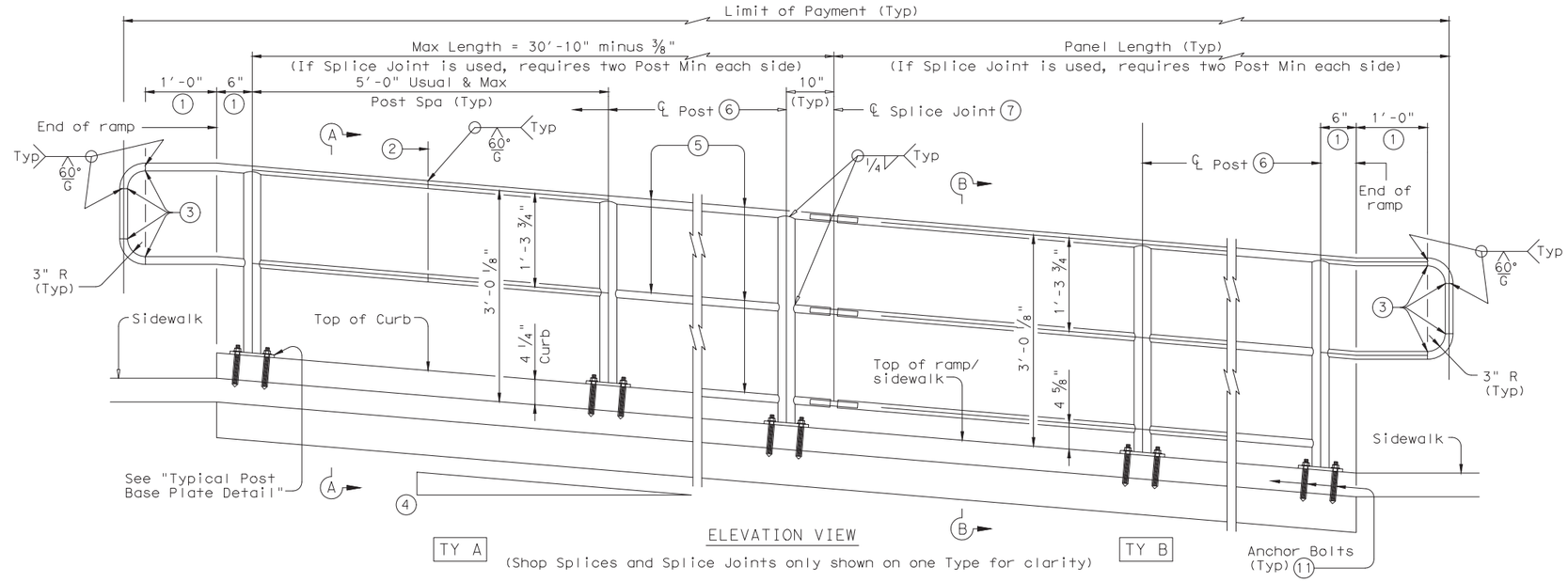

ELEVATION VIEW
(Shop Splices and Splice Joints only shown on one Type for clarity)

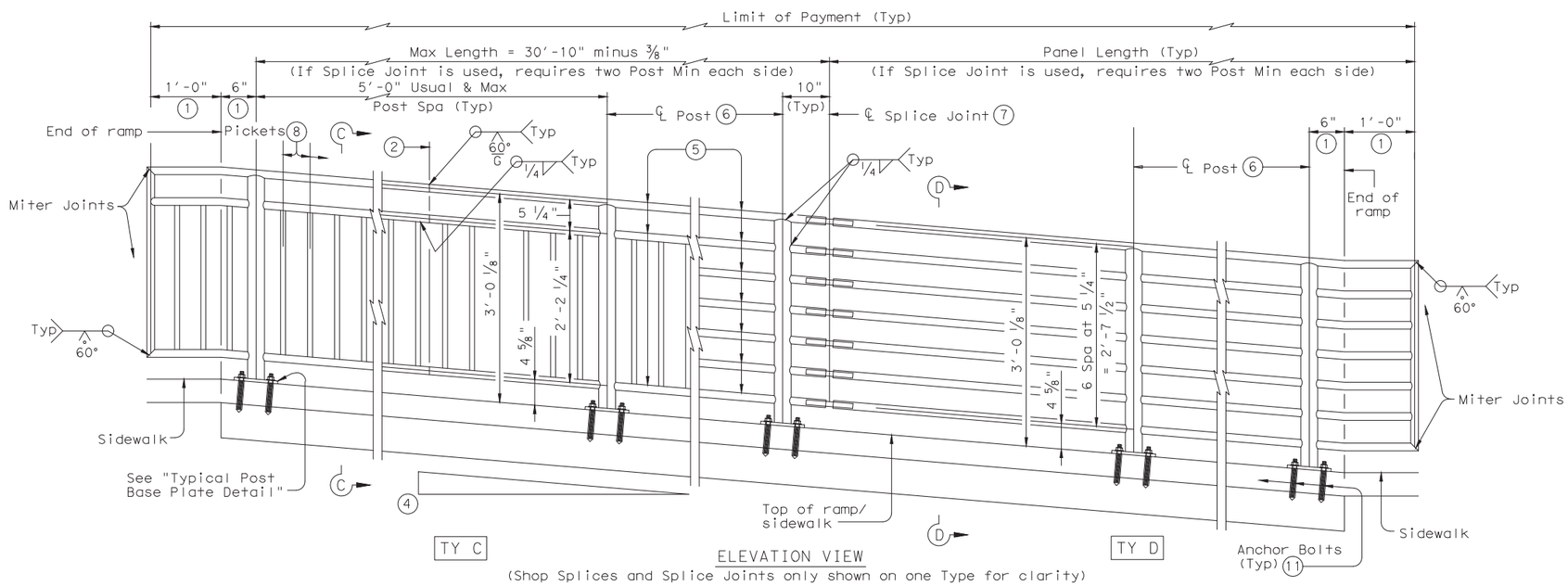

ELEVATION VIEW
(Shop Splices and Splice Joints only shown on one Type for clarity)

RECOMMENDED USAGE 9 10	
Dropoff Height/ Condition	Recommended Rail Options
<30" dropoff	TY A, TY B, TY C, or TY D
≥ 30" dropoff, or along Bike Path	TY E or TY F

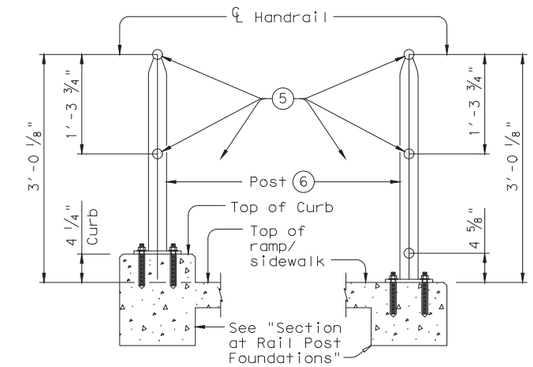

SECTION A-A
(Showing Handrail TY A)

SECTION B-B
(Showing Handrail TY B)

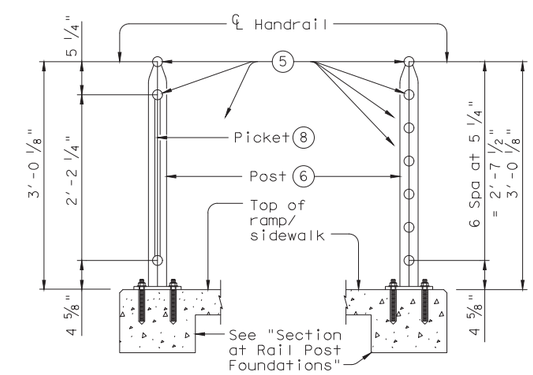

SECTION C-C
(Showing Handrail TY C)

SECTION D-D
(Showing Handrail TY D)

1. Parallel to ground.
2. One shop splice per panel is permitted with minimum 85 percent penetration. The weld may be square groove or single vee groove. Grind smooth.
3. Shop splice is permitted with minimum 85 percent penetration. The weld may be square groove or single vee groove. Grind smooth.
4. See Ramp Details located elsewhere in plans for ramp slope and dimensions. Maximum ramp slope will not exceed 8.3 percent. Level landing required for each 30" rise if grade exceeds 5 percent.
5. 1 ½" Dia. Standard Pipe (1.900" O.D., 0.145" wall thickness). Parallel to ramp / sidewalk. Provide holes as needed in 1 ½" Dia. pipe for galvanizing drainage and venting.
6. 2 ½" Dia. Standard Pipe (2.875" O.D., 0.203" wall thickness). See "Post Mount Detail" for crimping and trimming post to fit Dia. of top rail. Provide holes as needed in post for galvanizing drainage and venting. Plumb all posts.
7. See "Handrail Fabrication Details" for Splice Joints.
8. ℄ ⅝" Dia. Round Bar equal spacing at 4 ½" Max. Plumb all pickets.
9. When needed for accessibility (grade > 5 percent) or as needed for pedestrian safety.
10. Not to be used on bridges.
11. See "General Notes" for anchor bolt information.

SHEET 1 OF 3

Texas Department of Transportation — Design Division Standard

PEDESTRIAN HANDRAIL DETAILS

PRD-13

FILE: prd13.dgn	DN: TxDOT	CK: AM	DW: JTR	CK: CGL
© TxDOT December 2006	CONT	SECT	JOB	HIGHWAY
REVISIONS REVISED MAY, 2013 (VP)	0915	17	076	COMMON ST
	DIST	COUNTY		SHEET NO.
	SAT	COMAL		57 OF 97

DATE: 2/8/2024
FILE: W:\00_TGC Project Files\NBR100\CAD\NBR100_GENERAL.dwg

DISCLAIMER:
The use of this standard is governed by the "Texas Engineering Practice Act". No warranty of any kind is made by TxDOT for any purpose whatsoever. TxDOT assumes no responsibility for the conversion of this standard to other formats or for incorrect results or damages resulting from its use.

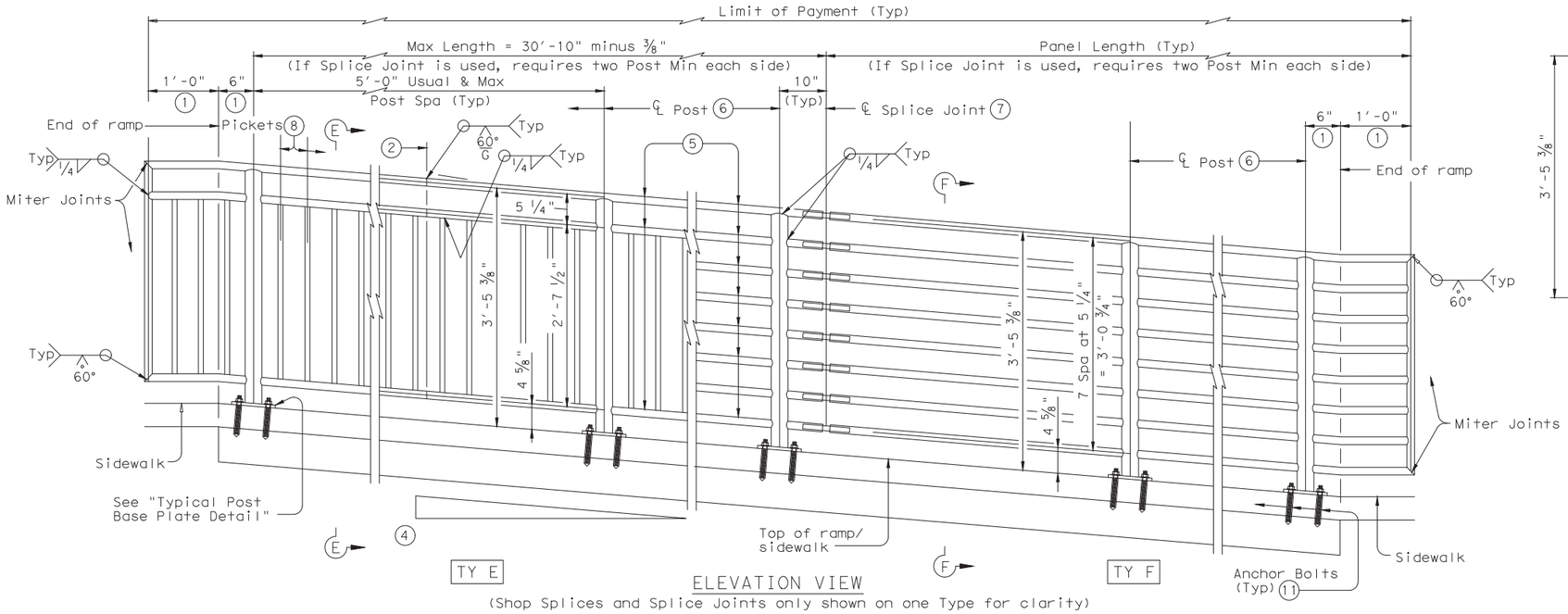

ELEVATION VIEW
(Shop Splices and Splice Joints only shown on one Type for clarity)

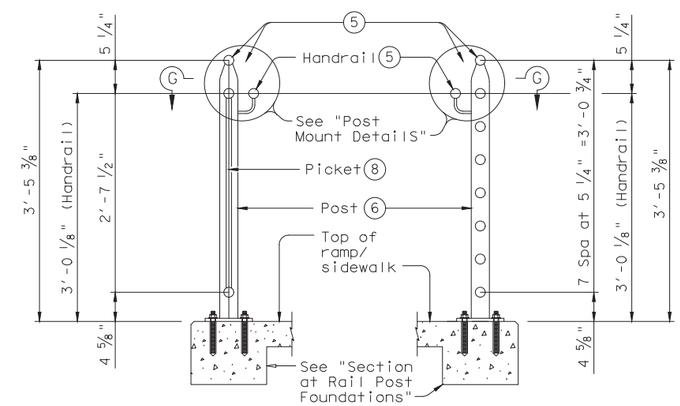

SECTION E-E
(Showing Handrail TY E)

SECTION F-F
(Showing Handrail TY F)

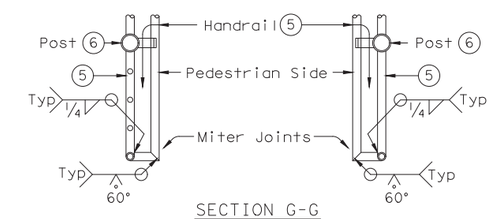

SECTION G-G
(Showing Handrail Termination)

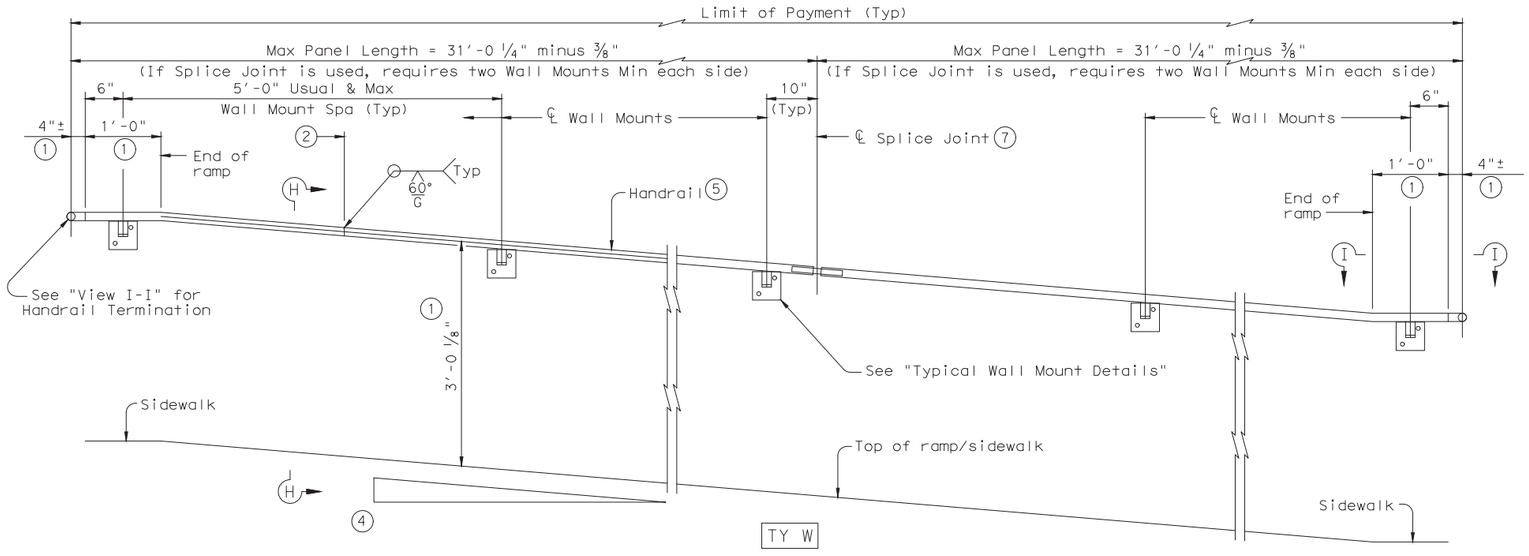

ELEVATION VIEW

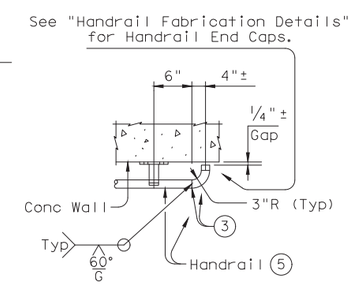

VIEW I-I
(Showing Handrail Termination)

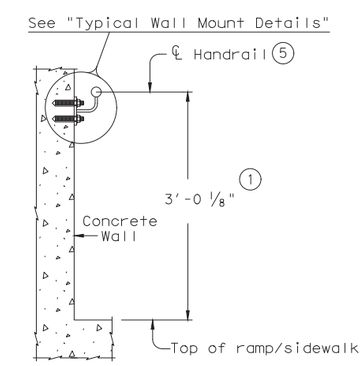

SECTION H-H
(Showing Handrail TY W)

1. Parallel to ground.
2. One shop splice per panel is permitted with minimum 85 percent penetration. The weld may be square groove or single vee groove. Grind smooth.
3. Shop splice is permitted with minimum 85 percent penetration. The weld may be square groove or single vee groove. Grind smooth.
4. See Ramp Details located elsewhere in plans for ramp slope and dimensions. Maximum ramp slope will not exceed 8.3 percent. Level landing required for each 30" rise if grade exceeds 5 percent.
5. 1 1/2" Dia. Standard Pipe (1.900" O.D., 0.145" wall thickness). Parallel to ramp / sidewalk. Provide holes as needed in 1 1/2" Dia. pipe for galvanizing drainage and venting.
6. 2 1/2" Dia. Standard Pipe (2.875" O.D., 0.203" wall thickness). See "Post Mount Detail" for crimping and trimming post to fit Dia. of top rail. Provide holes as needed in post for galvanizing drainage and venting. Plumb all posts.
7. See "Handrail Fabrication Details" for Splice Joints.
8. ℄ 5/8" Dia. Round Bar equal spacing at 4 1/2" Max. Plumb all pickets.
11. See "General Notes" for anchor bolt information.

SHEET 2 OF 3

Texas Department of Transportation — Design Division Standard

PEDESTRIAN HANDRAIL DETAILS

PRD-13

FILE: prd13.dgn	DN: TxDOT	CK: AM	DW: JTR	CK: CGL
© TxDOT December 2006	CONT	SECT	JOB	HIGHWAY
REVISIONS REVISED MAY, 2013 (VP)	0915	17	076	COMMON ST
	DIST		COUNTY	SHEET NO.
	SAT		COMAL	58 OF 97

DATE: 2/8/2024
FILE: W:\00_TGC Project Files\NBR100\CAD\NBR100_GENERAL.dwg

DISCLAIMER:
The use of this standard is governed by the "Texas Engineering Practice Act". No warranty of any kind is made by TxDOT for any purpose whatsoever. TxDOT assumes no responsibility for the conversion of this standard to other formats or for incorrect results or damages resulting from its use.

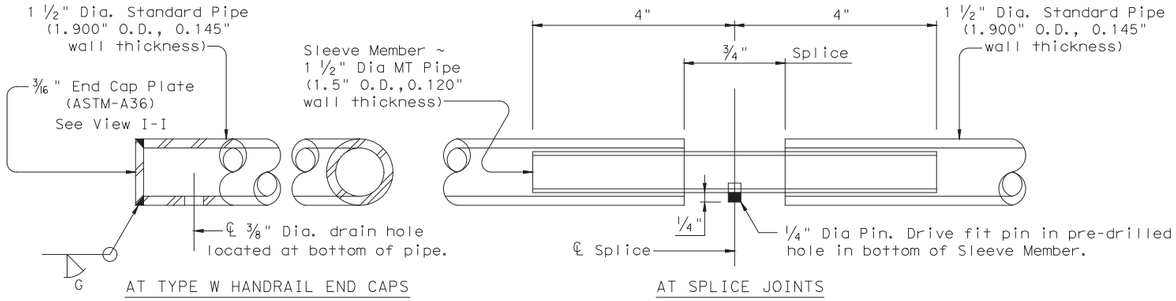

AT TYPE W HANDRAIL END CAPS

AT SPLICE JOINTS

HANDRAIL FABRICATION DETAILS

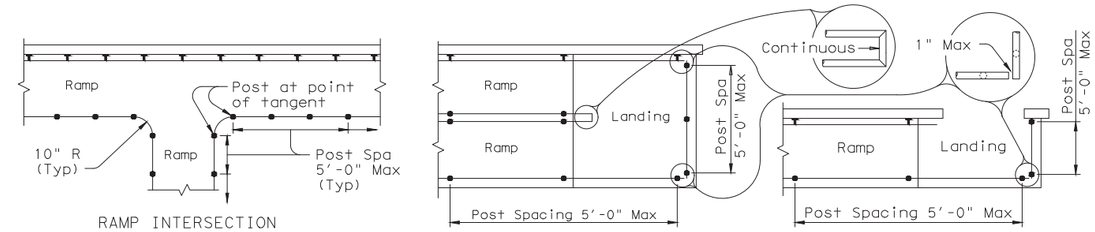

RAMP INTERSECTION

MULTI-LEVEL RAMP

SINGLE-LEVEL RAMP

PLAN SHOWING RAIL AT RAMP CONDITIONS

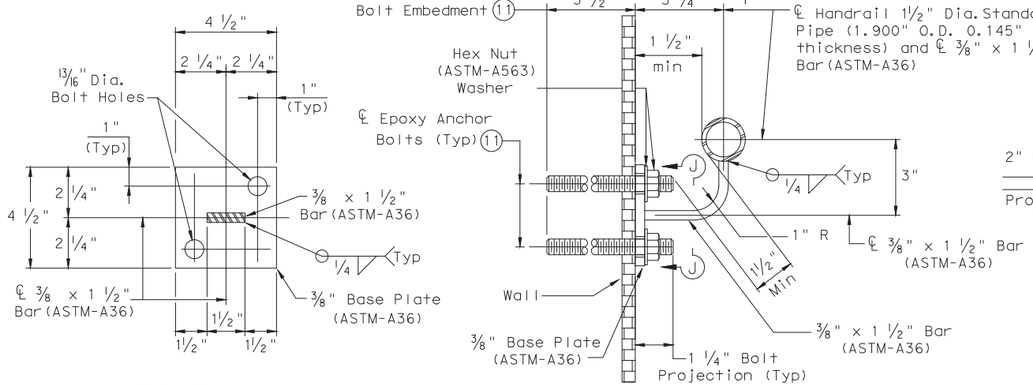

SECTION J-J
(Anchor Bolts not shown for clarity)

SECTION AT WALL MOUNT

TYPICAL WALL MOUNT DETAILS

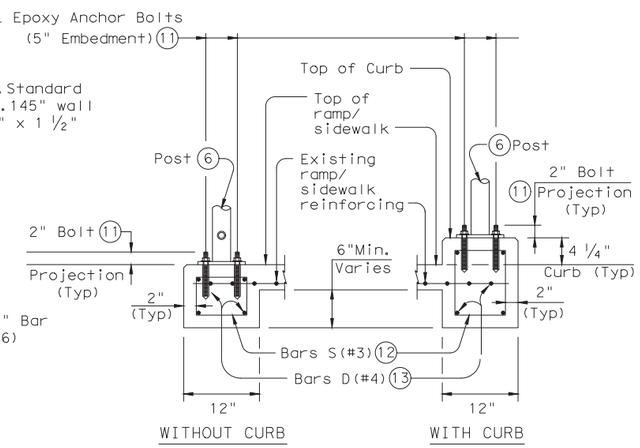

WITHOUT CURB

WITH CURB

SECTION AT RAIL POST FOUNDATIONS

GENERAL NOTES

Designed according to ADAAG, Texas Accessibility Standards, Uniform Building Code, and AASHTO LRFD Specifications.

Handrail anchorage details shown on this standard may require modification for select structure types. See appropriate details elsewhere in plans for these modifications.

Pipe will conform to ASTM-A53 Grade B or A500 Grade B. Steel plates and steel bars will conform to ASTM-A36. Mechanical tubing (MT) will conform to ASTM A513 Grade 1015 or higher. Galvanize all steel components except reinforcing steel unless noted otherwise.

Concrete for foundations will be in accordance with Item 531 "Sidewalks". All reinforcing steel must be Grade 60. Bar laps, where required, will be as follows: Uncoated ~ #4 = 1'-5" Epoxy coated ~ #4 = 2'-1"

When the plans require painted steel, follow the requirements for painting galvanized steel in Item 446, "Cleaning and Painting Steel". Sleeve Members will receive galvanization and only get field painted after installation unless directed otherwise by Engineer.

Epoxy Anchor bolts for wall mount and post base plate will be ⅝" Dia. ASTM A36 threaded rods with one hex nut and one hardened steel washer at each bolt. ⅝" Dia. threaded rod embedment depth for wall mounts is 3 ½" and embedment depth for post base plate is 5".

Embed threaded rods into concrete with a Type III (Class C) epoxy meeting the requirements of DMS-6100, "Epoxies and Adhesives". Mix and dispense adhesive with the manufacturer's static mixing nozzle/dual cartridge system. Core drill holes (percussion drilling not permitted).

At the contractor's option the post base plate anchor bolts may be cast with the Ramp/Sidewalk (See Cast-in-Place Anchor Bolt Options).

Optional cast-in-place anchor bolts will be ⅝" Dia ASTM A307 Grade A bolts (or A36 threaded rods with one tack welded hex nut each) with one hex nut and one hardened steel washer at each bolt. Embedment depth of cast-in-place bolt will be 8" for post base plate.

Handrails and any wall or other surface adjacent to them will be free of any sharp or abrasive elements.

Submit shop drawings to the Engineer unless otherwise noted. For curved handrail applications, fabricate the handrail to the curve if radius is less than 600 ft. Shop drawings are required when rail is fabricated to the curve.

For all handrails, erection drawings will be submitted to the Engineer for approval to ensure proper installation.

Drawings will show handrail mount locations with bolts setting, spacing, ramp slope, and/or splice joint locations, and handrail lengths with identification showing where each handrail goes on the layout.

Payment for concrete sidewalks or curb ramps will be paid for in accordance with Item 531 "Sidewalks".

Payment for all items shown is to be included in unit price bid in accordance with Item 450 "Railing" of the type specified.

All exposed edges will be rounded or chamfered to approximately ⅛" by grinding.

(5) 1 ½" Dia. Standard Pipe (1.900" O.D., 0.145" wall thickness). Parallel to ramp/sidewalk. Provide holes as needed in 1 ½" Dia. pipe for galvanizing drainage and venting.

(6) 2 ½" Dia. Standard Pipe (2.875" O.D., 0.203" wall thickness). Plumb all posts. See "Post Mount Detail" for crimping and trimming post to fit the diamenter of top rail. Provide holes as needed in post for galvanizing drainage and venting.

(11) See "General Notes" for anchor bolt information.

(12) Bars S(#3) spaced at 12" Max (Spaced 3" from outside edge of overall length of Ramp/Sidewalk).

(13) Provide 1 ½" end cover to Bars D(#4) from outside edge of overall length of Ramp/Sidewalk.

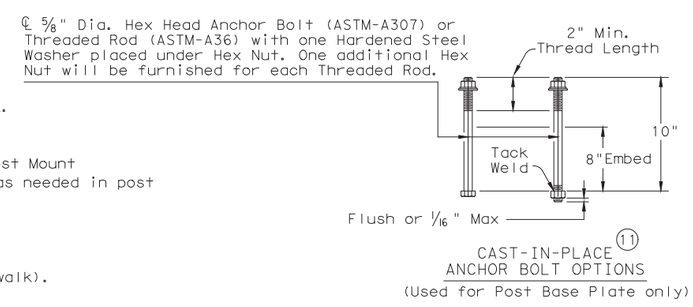

CAST-IN-PLACE ANCHOR BOLT OPTIONS
(Used for Post Base Plate only)

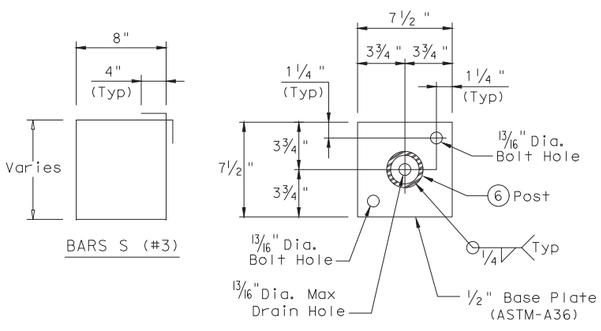

BARS S (#3)

TYPICAL POST BASE PLATE DETAIL

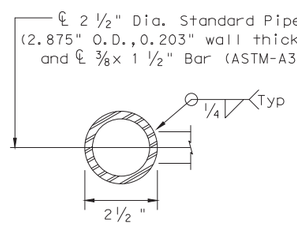

SECTION K-K

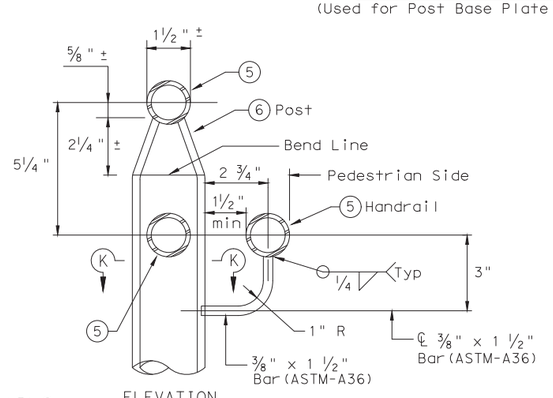

ELEVATION

POST MOUNT DETAILS

SHEET 3 OF 3

Texas Department of Transportation — Design Division Standard

PEDESTRIAN HANDRAIL DETAILS

PRD-13

FILE: prd13.dgn	DN: TxDOT	CK: AM	DW: JTR	CK: CGL
©TxDOT December 2006	CONT	SECT	JOB	HIGHWAY
REVISIONS REVISED MAY, 2013 (VP)	0915	17	076	COMMON ST
	DIST		COUNTY	SHEET NO.
	SAT		COMAL	59 OF 97

DATE: 2/6/2024
FILE: W:\00_TGC Project Files\NBR100\CAD\NBR100_GENERAL.dwg

DISCLAIMER: The use of this standard is governed by the "Texas Engineering Practice Act". No warranty of any kind is made by TxDOT for any purpose whatsoever. TxDOT assumes no responsibility for the conversion of this standard to other formats or for incorrect results or damages resulting from its use.

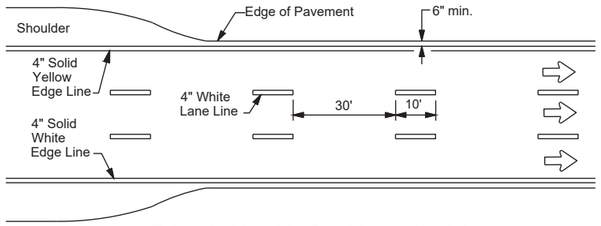

EDGE LINE AND LANE LINES ONE-WAY ROADWAY WITH OR WITHOUT SHOULDERS

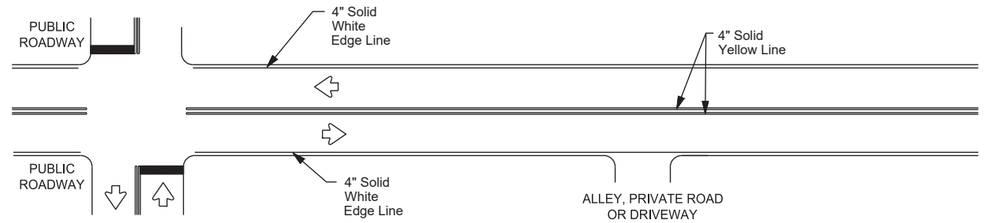

TYPICAL TWO-LANE, TWO-WAY PAVEMENT MARKINGS THROUGH INTERSECTIONS

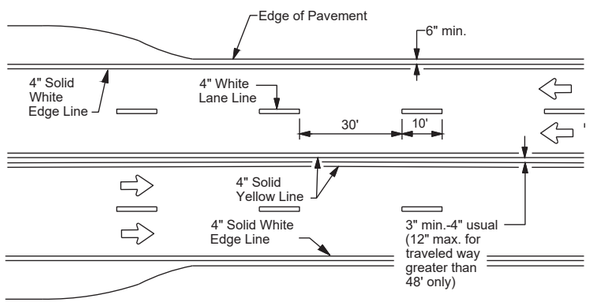

CENTERLINE AND LANE LINES FOUR LANE TWO-WAY ROADWAY WITH OR WITHOUT SHOULDERS

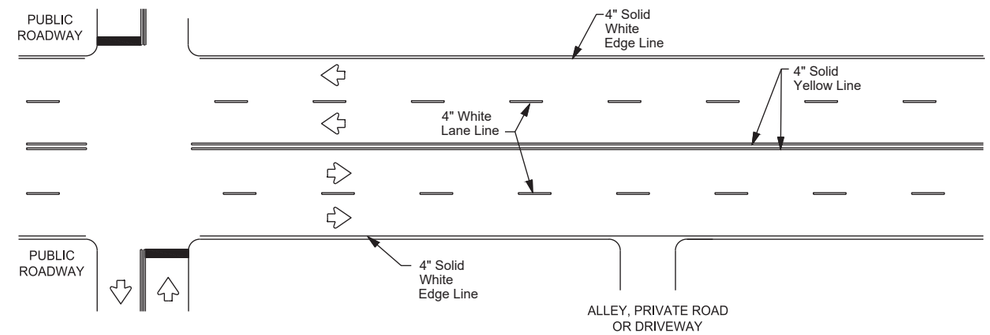

TYPICAL MULTI-LANE, TWO-WAY PAVEMENT MARKINGS THROUGH INTERSECTIONS

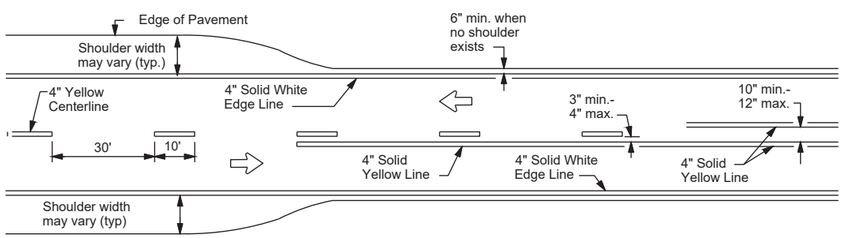

TWO LANE TWO-WAY ROADWAY WITH OR WITHOUT SHOULDERS

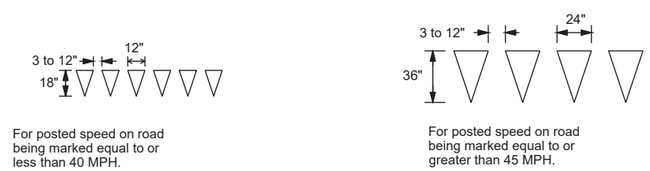

YIELD LINES

GENERAL NOTES

1. Edgeline striping shall be as shown in the plans or as directed by the Engineer. The edgeline should not be placed less less than 6 inches from the edge of pavement. This distance may vary due to pavement raveling or other conditions. Edgelines are not required in curb and gutter sections of roadways.

2. The traveled way includes only that portion of the roadway used for vehicular travel. It does not include the parking lanes, sidewalks, berms and shoulders. The traveled ways shall be measured from the inside of edgeline to the inside of edgeline of a two lane roadway.

MATERIAL SPECIFICATIONS	
PAVEMENT MARKERS (REFLECTORIZED)	DMS-4200
EPOXY AND ADHESIVES	DMS-6100
BITUMINOUS ADHESIVE FOR PAVEMENT MARKERS	DMS-6130
TRAFFIC PAINT	DMS-8200
HOT APPLIED THERMOPLASTIC	DMS-8220
PERMANENT PREFABRICATED PAVEMENT MARKINGS	DMS-8240

All pavement marking materials shall meet the required Departmental Material Specifications as specified by the plans.

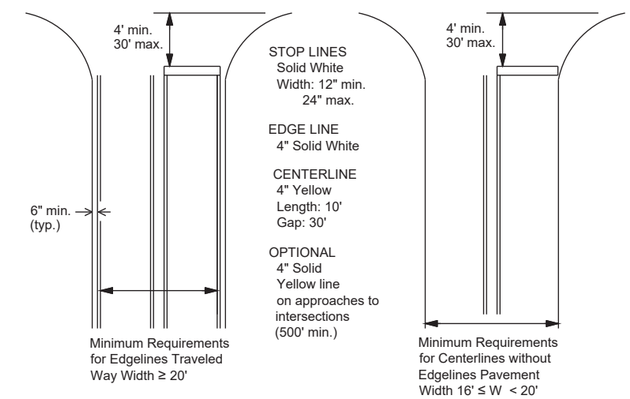

GUIDE FOR PLACEMENT OF STOP LINES, EDGE LINE & CENTERLINE

Based on Traveled Way and Pavement Widths for Undivided Highways

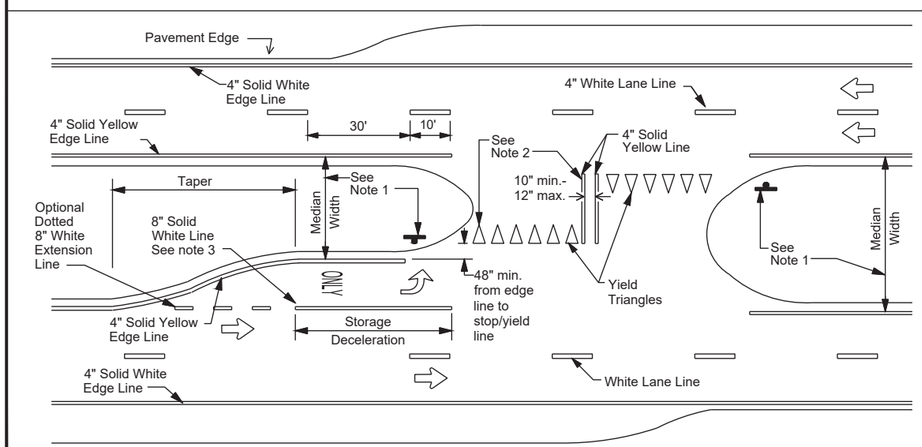

FOUR LANE DIVIDED ROADWAY CROSSOVERS

NOTES

1. Where divided highways are separated by median widths at the median opening itself of 30 feet or more, median openings shall be signed as two separate intersections. Each median opening has two width measurements, with one measurement for each approach. The narrow median width will be the controlling width to determine if signs are required. Yield signs are the typical intersection control. Stop signs are optional as determined by the Engineer.

2. Install median striping (double yellow centerlines and stop bars/yield triangles) when a 50' or greater median centerline can be placed. Stop bars shall only be used with stop signs. Yield traingles shall only be used with yield signs.

3. Length of turn bays, including taper, deceleration, and storage lengths shall be as shown on the plans or as directed by the Engineer.

Texas Department of Transportation

Traffic Safety Division Standard

TYPICAL STANDARD PAVEMENT MARKINGS

PM(1)-20

FILE: pm1-20.dgn	DN:	CK:	DW:	CK:
©TxDOT November 1978	CONT	SECT	JOB	HIGHWAY
8-95 3-03 REVISIONS	0915	17	076	COMMON ST
5-00 2-12	DIST		COUNTY	SHEET NO.
6-00 6-20	SAT		COMAL	60 OF 97

22A

DATE: 2/8/2024
FILE: W:\00_TGC Project Files\NBR100\CAD\NBR100_GENERAL.dwg

REFLECTIVE RAISED PAVEMENT MARKERS FOR VEHICLE POSITIONING GUIDANCE

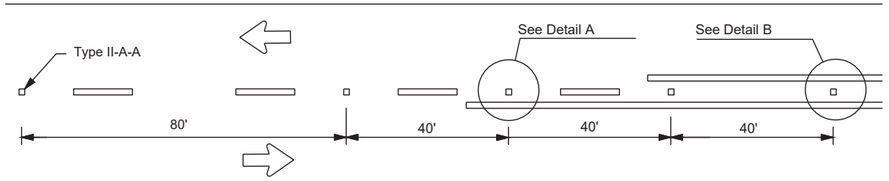

CENTERLINE FOR ALL TWO LANE ROADWAYS

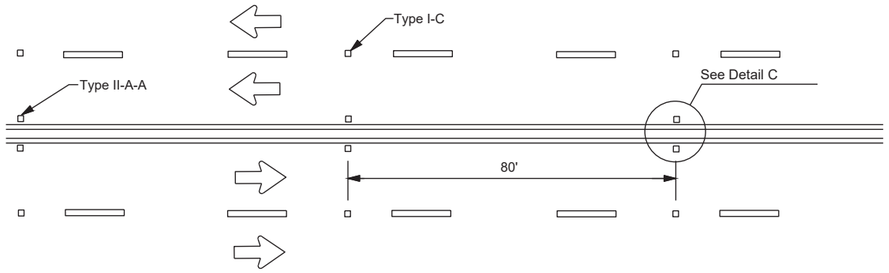

CENTERLINE & LANE LINES FOR FOUR LANE TWO-WAY HIGHWAYS

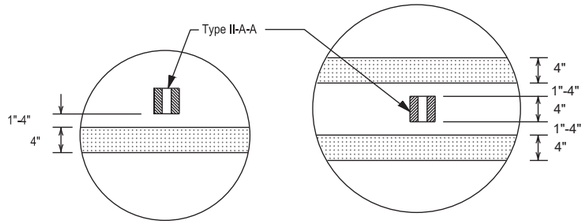

DETAIL "A" DETAIL "B"

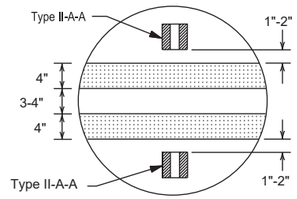

DETAIL "C"

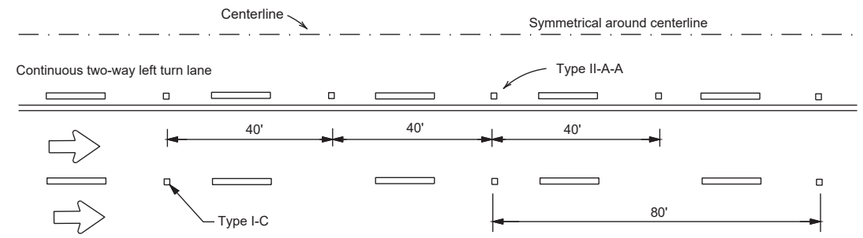

CENTERLINE AND LANE LINES FOR TWO-WAY LEFT TURN LANE

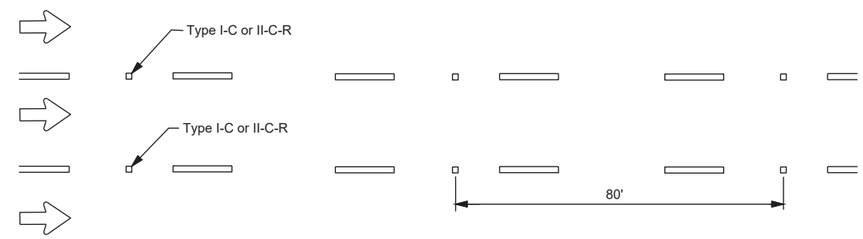

LANE LINES FOR ONE-WAY ROADWAY (NON-FREEWAY FACILITIES)

Raised pavement markers Type II-C-R shall have clear face toward normal traffic and red face toward wrong-way traffic.

MATERIAL SPECIFICATIONS	
PAVEMENT MARKERS (REFLECTORIZED)	DMS-4200
EPOXY AND ADHESIVES	DMS-6100
BITUMINOUS ADHESIVE FOR PAVEMENT MARKERS	DMS-6130
TRAFFIC PAINT	DMS-8200
HOT APPLIED THERMOPLASTIC	DMS-8220
PERMANENT PREFABRICATED PAVEMENT MARKINGS	DMS-8240

All pavement marking materials shall meet the required Departmental Material Specifications as specified by the plans.

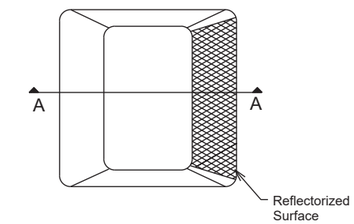

Type I (Top View)

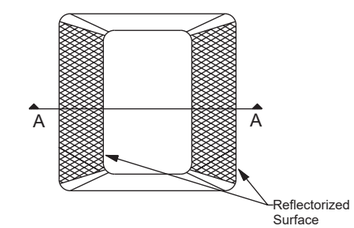

Type II (Top View)

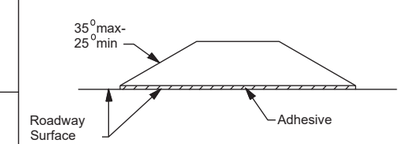

SECTION A

RAISED PAVEMENT MARKERS

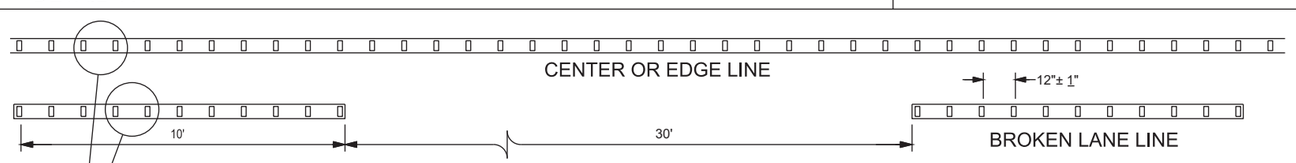

REFLECTORIZED PROFILE PATTERN DETAIL

USING REFLECTIVE PROFILE PAVEMENT MARKINGS

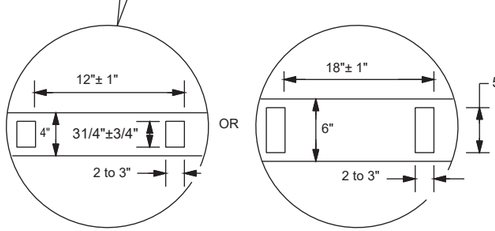

4" EDGE LINE, CENTER LINE OR LANE LINE

OPTIONAL 6" EDGE LINE, CENTER LINE OR LANE LINE

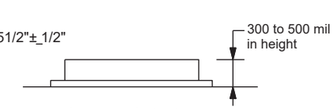

A quick field check for the thickness of base line and profile marking is approximately equal to a stack of 5 quarters to a maximum height of 7 quarters.

NOTE

Profile markings shall not be placed on roadways with a posted speed limit of 45 MPH or less.

GENERAL NOTES

1. All raised pavement markers placed in broken lines shall be placed in line with and midway between the stripes.
2. On concrete pavements the raised pavement markers should be placed to one side of the longitudinal joints.

Texas Department of Transportation

Traffic Safety Division Standard

POSITION GUIDANCE USING RAISED MARKERS RELECTORIZED PROFILE MARKINGS PM(2)-20

FILE: pm2-20.dgn	DN:	CK:	DW:	CK:
©TxDOT April 1977	CONT	SECT	JOB	HIGHWAY
REVISIONS 4-92 2-10, 5-00 2-12, 8-00 6-20	0915	17	076	COMMON ST
	DIST	COUNTY		SHEET NO.
	SAT	COMAL		61 OF 97

22B

DISCLAIMER: The use of this standard is governed by the "Texas Engineering Practice Act". No warranty of any kind is made by TxDOT for any purpose whatsoever. TxDOT assumes no responsibility for the conversion of this standard to other formats or for incorrect results or damages resulting from its use.

DATE: 2/8/2024
FILE: W:\00_TGC Project Files\NBR100\CAD\NBR100_GENERAL.dwg

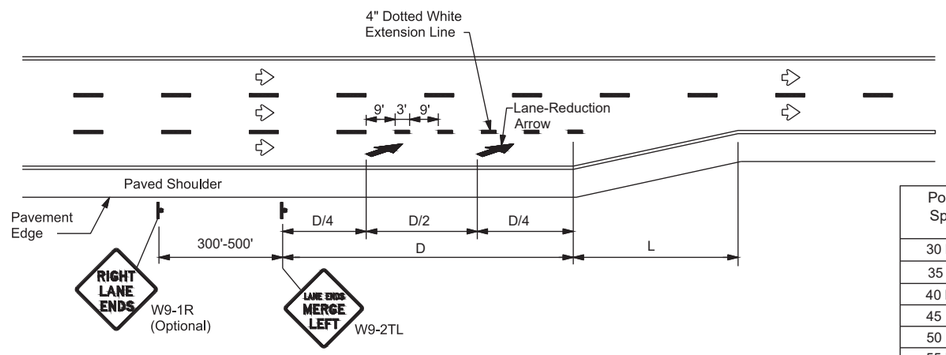

LANE REDUCTION

Posted Speed	D (ft)	L (ft)
30 MPH	460	$L=\frac{WS^2}{60}$
35 MPH	565	
40 MPH	670	
45 MPH	775	L=WS
50 MPH	885	
55 MPH	990	
60 MPH	1,100	
65 MPH	1,200	
70 MPH	1,250	
75 MPH	1,350	

NOTES

1. Lane reduction pavement markings are used where the number of through lanes is reduced because of narrowing of the roadway or because of a section of on-street parking in what would otherwise be a through lane. For Texas Super 2 Passing Lanes, see TS2(PL) standard sheets.
2. On divided highways, an additional W9-1R "RIGHT LANE ENDS" sign may be installed in the median aligned with the W9-1R sign on the right side of the highway.
3. Lane reduction arrows are required for speeds of 45 mph or greater. An optional third lane reduction arrow may be added based on engineering judgement. If used, the optional third lane reduction arrow should be centered between the first and last lane reduction arrows.
4. For lane reductions on Freeways and Expressways, signing shall conform to the TxDOT Freeway Signing Handbook.

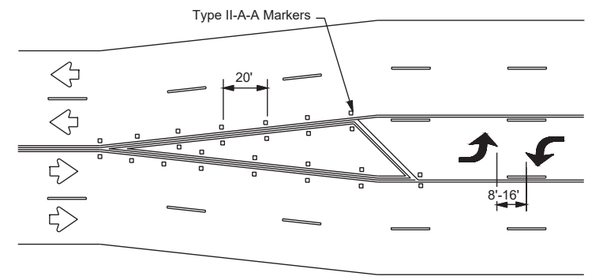

A two-way left-turn (TWLT) lane-use arrow pavement marking should be used at or just downstream from the beginning of a two-way left-turn lane within a corridor. Repeating the marking after each intersection or dedicated turn bay is not required unless stated elsewhere in the plans.

TYPICAL TRANSITION FOR TWLTL AND DIVIDED HIGHWAY

GENERAL NOTES

1. Lane use word and arrow markings shall be used where through lanes approaching an intersection become mandatory turn lanes. Lane use word and arrow markings should be used in auxiliary lanes of substantial length. Lane use arrow markings or word and arrow markings may be used in other lanes and turn bays for emphasis. Details for words and arrows are as shown in the Standard Highway Sign Designs for Texas. 2. When lane-use words and arrow markings are used, two sets of arrows should be used if the length of the bay is greater than 180 feet. When a single lane use arrow or word and arrow marking is used for a short turn lane, it should be located at or near the upstream end of the full-width turn lane.
3. Use raised pavement marker Type I-C with undivided highways, flush medians and two way left turn lanes. Use raised pavement marker Type II-C-R with divided highways and raised medians.
4. Length of turn bays, including taper, deceleration, and storage lengths shall be as shown on the plans or as directed by the Engineer.

MATERIAL SPECIFICATIONS	
PAVEMENT MARKERS (REFLECTORIZED)	DMS-4200
EPOXY AND ADHESIVES	DMS-6100
BITUMINOUS ADHESIVE FOR PAVEMENT MARKERS	DMS-6130
TRAFFIC PAINT	DMS-8200
HOT APPLIED THERMOPLASTIC	DMS-8220
PERMANENT PREFABRICATED PAVEMENT MARKINGS	DMS-8240

All pavement marking materials shall meet the required Departmental Material Specifications as specified by the plans.

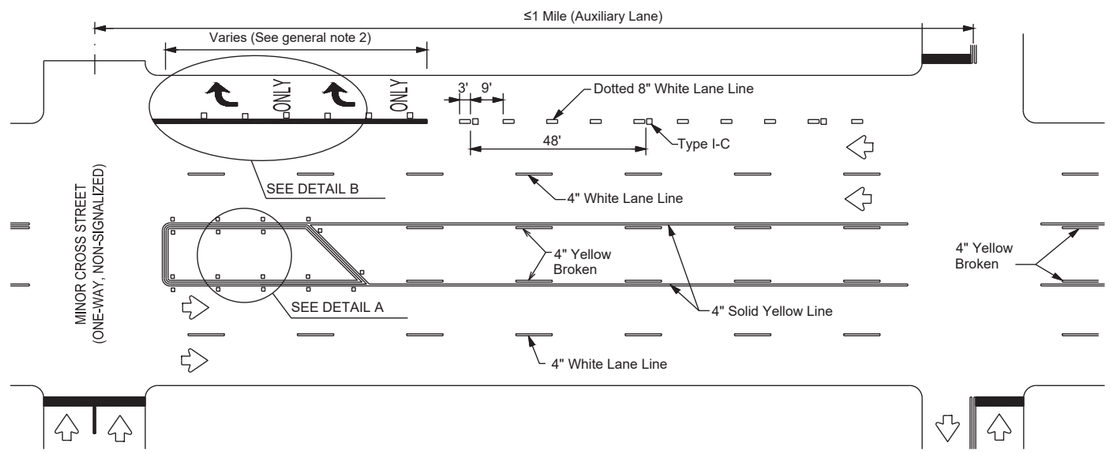

TYPICAL TWLTL AT ONE-WAY STREET AND RIGHT TURN AUXILIARY LANE

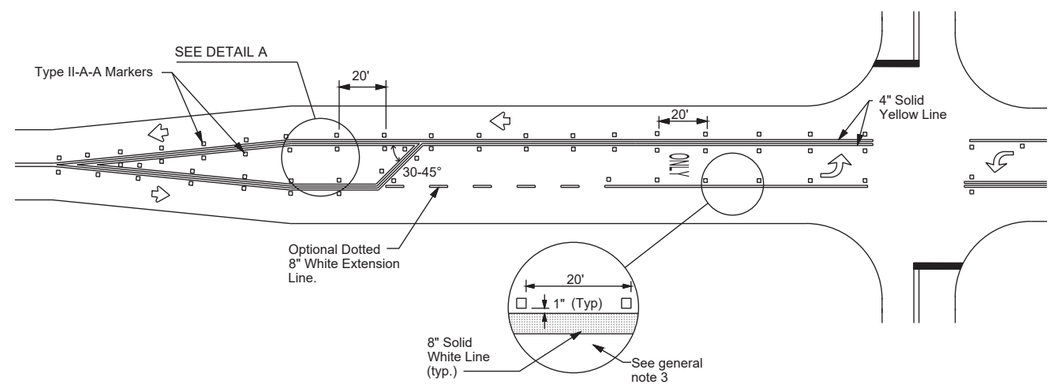

TYPICAL TWO-LANE HIGHWAY INTERSECTION WITH LEFT TURN BAYS

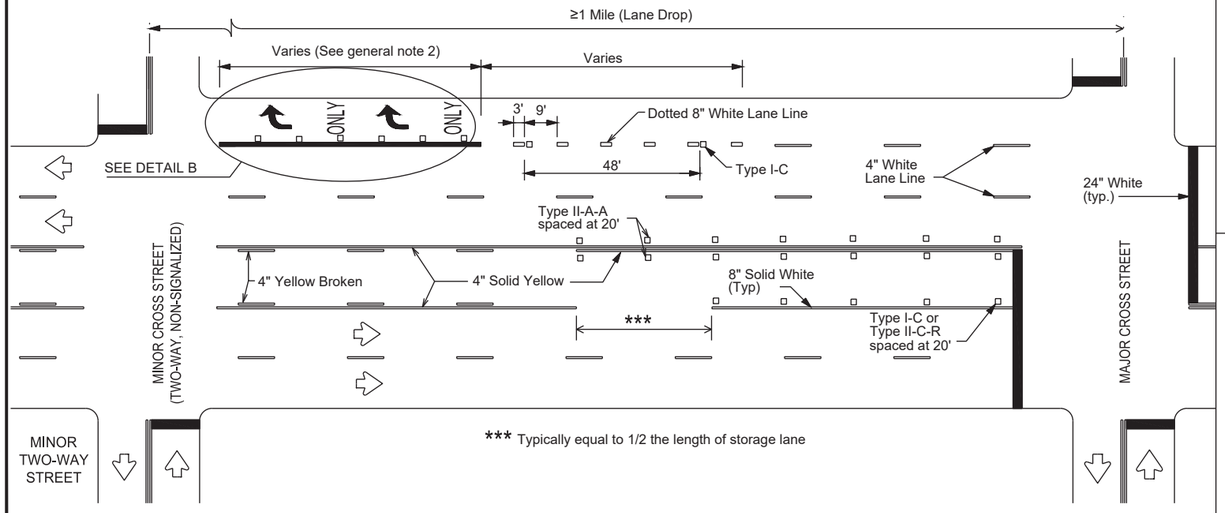

TYPICAL TWLTL AT TWO-WAY CROSS STREET AND RIGHT TURN LANE DROP

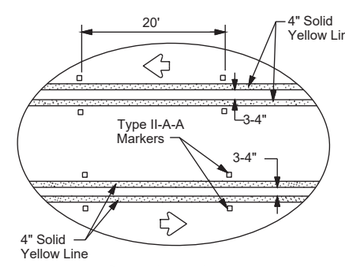

DETAIL A

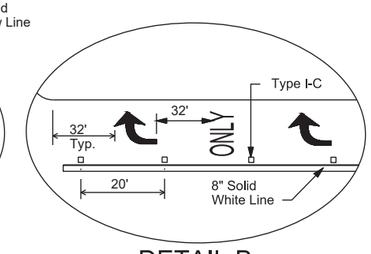

DETAIL B

Texas Department of Transportation

Traffic Safety Division Standard

TWO-WAY LEFT TURN LANES, RURAL LEFT TURN BAYS, AND LANE REDUCTION PAVEMENT MARKINGS PM(3)-20

FILE: pm3-20.dgn	DN:	CK:	DW:	CK:
©TxDOT April 1998	CONT	SECT	JOB	HIGHWAY
REVISIONS 5-00 2-10, 8-00 2-12, 3-03 6-20	0915	17	076	COMMON ST
	DIST	COUNTY		SHEET NO.
	SAT	COMAL		62 OF 97

22C

DISCLAIMER: The use of this standard is governed by the "Texas Engineering Practice Act". No warranty of any kind is made by TxDOT for any purpose whatsoever. TxDOT assumes no responsibility for the conversion of this standard to other formats or for incorrect results or damages resulting from its use.

DATE: 2/8/2024
FILE: W:\00_TGC Project Files\NBR100\CAD\NBR100_GENERAL.dwg

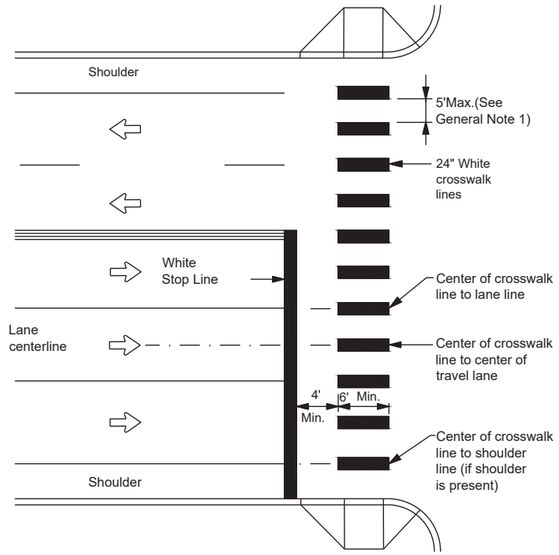

HIGH-VISIBILITY LONGITUDINAL CROSSWALK
AT CONTROLLED APPROACH

GENERAL NOTES

1. Longitudinal crosswalk lines should not be placed in the wheel path of vehicles. Center the crosswalk lines on travel lanes, lane lines, and shoulder lines (if present).
2. A minimum 6" clear distance shall be provided to the curb face. If the last crosswalk line falls into this distance it must be omitted.
3. For divided roadways, adjustments in spacing of the crosswalk lines should be made in the median so that the crosswalk lines are maintained in their proper location across the travel portion of the roadway.
4. At skewed crosswalks, the crosswalk lines are to remain parallel to the lane lines.
5. Each crosswalk shall be a minimum of 6' wide.
6. The High-Visibility Longitudinal Crosswalk is the preferred crosswalk pattern on State Highways. Other crosswalk patterns as shown in the "Texas Manual on Uniform Traffic Control Devices" may be used. All crosswalk designs and dimension shall comply with the "Texas Manual on Uniform Traffic Control Devices."
7. Final placement of Stop Bar/Yield Triangles and Crosswalk shall be approved by the Engineer in the field.

MATERIAL SPECIFICATIONS	
PAVEMENT MARKERS (REFLECTORIZED)	DMS-4200
EPOXY AND ADHESIVES	DMS-6100
BITUMINOUS ADHESIVE FOR PAVEMENT MARKERS	DMS-6130
TRAFFIC PAINT	DMS-8200
HOT APPLIED THERMOPLASTIC	DMS-8220
PERMANENT PREFABRICATED PAVEMENT MARKINGS	DMS-8240

All pavement marking materials shall meet the required Departmental Material Specifications as specified by the plans.

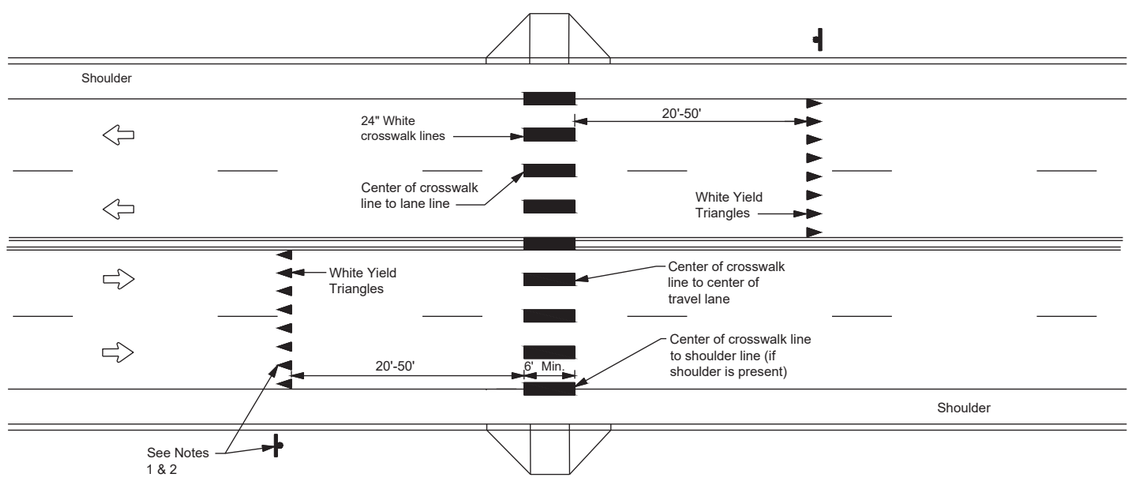

UNSIGNALIZED MID BLOCK HIGH-VISIBILITY
LONGITUDINAL CROSSWALK

NOTES

1. Use yield triangles with "Yield Here to Pedestrians" signs at unsignalized mid block crosswalks.
2. Use stop bars with "Stop Here on Red" signs at mid block crosswalks controlled by traffic signals or pedestrian hybrid beacons.

Texas Department of Transportation

Traffic Safety Division Standard

CROSSWALK PAVEMENT MARKINGS

PM(4)-20

FILE: pm4-20.dgn	DN:	CK:	DW:	CK:
©TxDOT June 2020	CONT	SECT	JOB	HIGHWAY
REVISIONS	0915	17	076	COMMON ST
	DIST		COUNTY	SHEET NO.
	SAT		COMAL	63 OF 97

22D

DISCLAIMER: The use of this standard is governed by the "Texas Engineering Practice Act". No warranty of any kind is made by TxDOT for any purpose whatsoever. TxDOT assumes no responsibility for the conversion of this standard to other formats or for incorrect results or damages resulting from its use.

DATE: 2/8/2024
FILE: W:\00_TGC Project Files\NBR100\CAD\NBR100_GENERAL.dwg

SIGN SUPPORT DESCRIPTIVE CODES

(Descriptive Codes correspond to project estimate and quantities sheets)

SM RD SGN ASSM TY XXXXX(X)XX(X-XXXX)

Post Type
- FRP = Fiberglass Reinforced Plastic Pipe (see SMD(FRP))
- TWT = Thin-Walled Tubing (see SMD(TWT))
- 10BWG = 10 BWG Tubing (see SMD(SLIP-1) to (SLIP-3))
- S80 = Schedule 80 Pipe (see SMD(SLIP-1) to (SLIP-3))

Number of Posts (1 or 2)

Anchor Type
- UA = Universal Anchor - Concreted (see SMD(FRP) and (TWT))
- UB = Universal Anchor - Bolted down (see SMD(FRP) and (TWT))
- WS = Wedge Anchor Steel - (see SMD(TWT))
- WP = Wedge Anchor Plastic (see SMD(TWT))
- SA = Slipbase - Concreted (see SMD(SLIP-1) to (SLIP-3))
- SB = Slipbase - Bolted Down (see SMD(SLIP-1) to (SLIP-3))

Sign Mounting Designation
- P = Prefab. "Plain" (see SMD(SLIP-1) to (SLIP-3), (TWT), (FRP))
- T = Prefab. "T" (see SMD(SLIP-1) to (SLIP-3), (TWT))
- U = Prefab. "U" (see SMD(SLIP-1) to (SLIP-3))

IF REQUIRED
- 1EXT or 2EXT = Number of Extensions (see SMD(SLIP-1) to (SLIP-3), (TWT))
- BM = Extruded Wind Beam (see SMD(SLIP-1) to (SLIP-3))
- WC = 1.12 #/ft Wing Channel (see SMD(SLIP-1) to (SLIP-3))
- EXAL = Extruded Aluminum Sign Panels (see SMD(SLIP-3))

REQUIRED CLEARANCE FOR BREAKAWAY SUPPORT

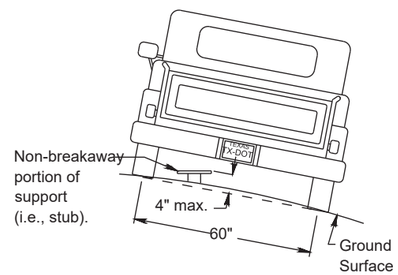

To avoid vehicle undercarriage snagging, any substantial remains of a breakaway support, when it is broken away, should not project more than 4 inches above a 60-inch chord (i.e., typical space between wheel paths).

No more than 2 sign posts should be located within a 7 ft. circle.

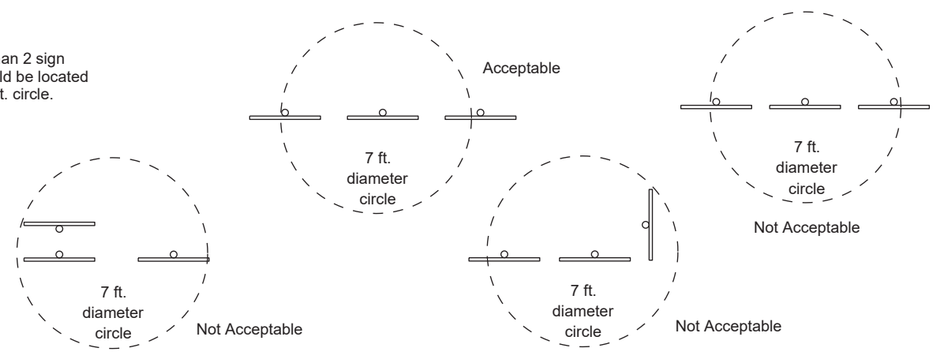

SIGN LOCATION

PAVED SHOULDERS

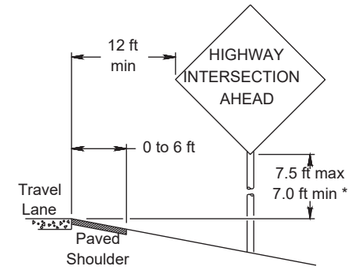

LESS THAN 6 FT. WIDE

When the shoulder is 6 ft. or less in width, the sign must be placed at least 12 ft. from the edge of the travel lane.

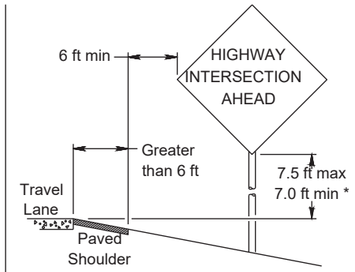

GREATER THAN 6 FT. WIDE

When the shoulder is greater than 6 ft in width, the sign must be placed at least 6 ft. from the edge of the shoulder.

T-INTERSECTION

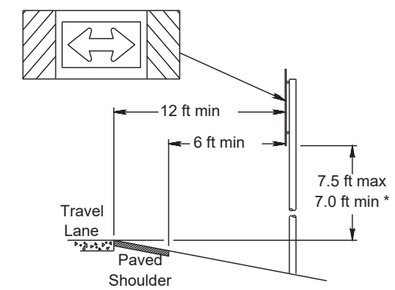

When this sign is needed at the end of a two-lane, two way roadway, the right edge of the sign should be in line with the centerline of the roadway. Place as close to ROW as practical.

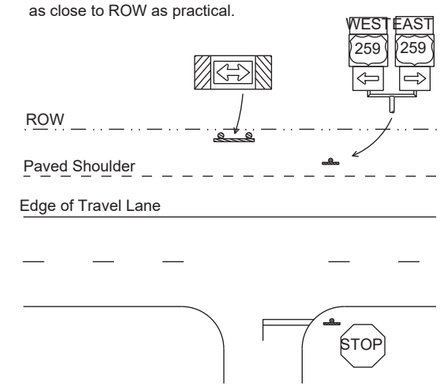

BEHIND BARRIER

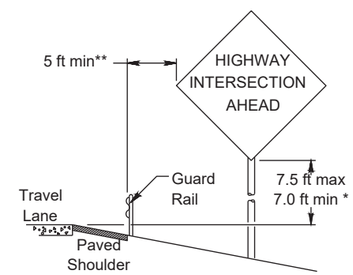

BEHIND GUARDRAIL

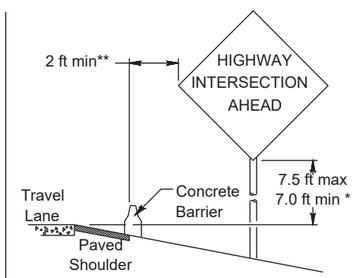

BEHIND CONCRETE BARRIER

**Sign clearance based on distance required for proper guard rail or concrete barrier performance.

* Signs shall be mounted using the following condition that results in the greatest sign elevation:
(1) a minimum of 7 to a maximum of 7.5 feet above the edge of the travel lane or
(2) a minimum of 7 to a maximum of 7.5 feet above the grade at the base of the support when sign is installed on the backslope.

The maximum values may be increased when directed by the Engineer.

See the Traffic Operations Division website for detailed drawings of sign clamps, Triangular Slipbase System components and Wedge Anchor System components.

The website address is:
http://www.txdot.gov/publications/traffic.htm

TYPICAL SIGN ATTACHMENT DETAIL

Single Signs

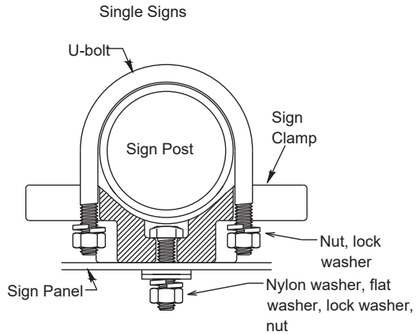

Bolts used to mount sign panels to the clamp are 5/16-18 UNC galvanized square head with nut, nylon washer, flat washer and lock washer. The bolt length is 1 inch for aluminum.

When two sign clamps are used to mount signs back-to-back, use a 5/16-18 UNC galvanized hex head per ASTM A307 with nut and helical-spring lock washer. The approximate bolt lengths for various post sizes and sign clamp types are given in the table at right. The bolt length may need to be adjusted depending upon field conditions.

Sign clamps may be either the specific size clamp or the universal clamp.

Back-to-Back Signs

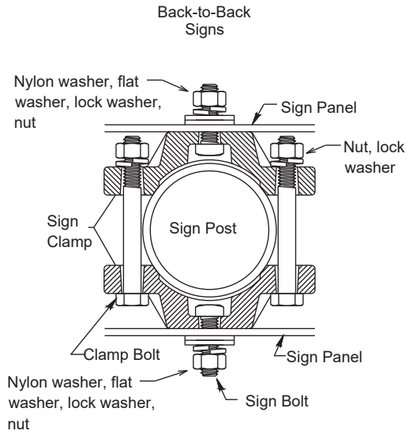

Pipe Diameter	Approximate Bolt Length	
	Specific Clamp	Universal Clamp
2" nominal	3"	3 or 3 1/2"
2 1/2" nominal	3 or 3 1/2"	3 1/2 or 4"
3" nominal	3 1/2 or 4"	4 1/2"

SIGNS WITH PLAQUES

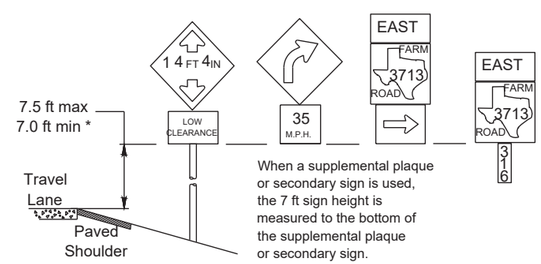

When a supplemental plaque or secondary sign is used, the 7 ft sign height is measured to the bottom of the supplemental plaque or secondary sign.

CURB & GUTTER OR RAISED ISLAND

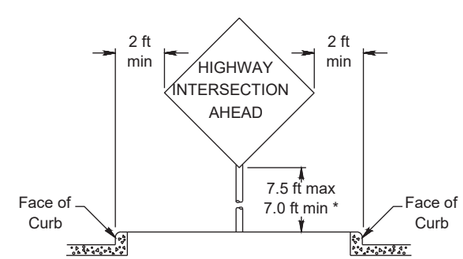

RESTRICTED RIGHT-OF-WAY

(When 6 ft min. is not possible.)

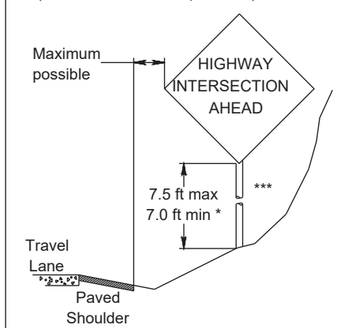

Right-of-way restrictions may be created by rocks, water, vegetation, forest, buildings, a narrow island, or other factors.

In situations where a lateral restriction prevents the minimum horizontal clearance from the edge of the travel lane, signs should be placed as far from the travel lane as practical.

*** Post may be shorter if protected by guardrail or if Engineer determines the post could not be hit due to extreme slope.

Texas Department of Transportation
Traffic Operations Division

SIGN MOUNTING DETAILS
SMALL ROADSIDE SIGNS
GENERAL NOTES & DETAILS

SMD(GEN)-08

©TxDOT July 2002	DN: TXDOT	CK: TXDOT	DW: TXDOT	CK: TXDOT
9-08 REVISIONS	CONT	SECT	JOB	HIGHWAY
	0915	17	076	COMMON ST
	DIST		COUNTY	SHEET NO.
	SAT		COMAL	64 OF 97

26A

DISCLAIMER: The use of this standard is governed by the "Texas Engineering Practice Act". No warranty of any kind is made by TxDOT for any purpose whatsoever. TxDOT assumes no responsibility for the conversion of this standard to other formats or for incorrect results or damages resulting from its use.

DATE: 2/8/2024
FILE: W:\00_TGC Project Files\NBR100\CAD\NBR100_GENERAL.dwg

TRIANGULAR SLIPBASE INSTALLATION GENERAL REQUIREMENTS

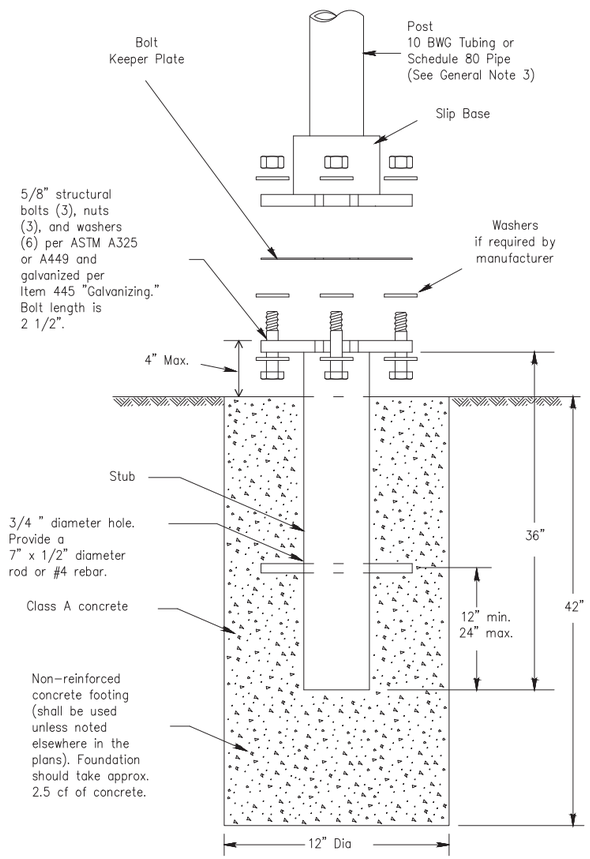

SM RD SGN ASSM TY XXXXX(X)SA(X-XXXX)

NOTE

There are various devices approved for the Triangular Slipbase System. Please reference the Material Producer List for approved slip base systems. http://www.txdot.gov/business/producer list.htm_ The devices shall be installed per manufacturers' recommendations. Installation procedures shall be provided to the Engineer by Contractor.

GENERAL NOTES:

1. Slip base shall be permanently marked to indicate manufacturer. Method, design, and location of marking are subject to approval of the TxDOT Traffic Standards Engineer.
2. Material used as post with this system shall conform to the following specifications:
   - 10 BWG Tubing (2.875" outside diameter)
     - 0.134" nominal wall thickness
     - Seamless or electric-resistance welded steel tubing or pipe
     - Steel shall be HSLAS Gr 55 per ASTM A1011 or ASTM A1008
     - Other steels may be used if they meet the following:
       - 55,000 PSI minimum yield strength
       - 70,000 PSI minimum tensile strength
       - 20% minimum elongation in 2"
     - Wall thickness (uncoated) shall be within the range of 0.122" to 0.138"
     - Outside diameter (uncoated) shall be within the range of 2.867" to 2.883"
     - Galvanization per ASTM A123 or ASTM A653 G210. For precoated steel tubing (ASTM A653), recoat tube outside diameter weld seam by metallizing with zinc wire per ASTM B833.
   - Schedule 80 Pipe (2.875" outside diameter)
     - 0.276" nominal wall thickness
     - Steel tubing per ASTM A500 Gr C
     - Other seamless or electric-resistance welded steel tubing or pipe with equivalent outside diameter and wall thickness may be used if they meet the following:
       - 46,000 PSI minimum yield strength
       - 62,000 PSI minimum tensile strength
       - 21% minimum elongation in 2"
     - Wall thickness (uncoated) shall be within the range of 0.248" to 0.304"
     - Outside diameter (uncoated) shall be within the range of 2.855" to 2.895"
     - Galvanization per ASTM A123
3. See the Traffic Operations Division website for detailed drawings of sign clamps and Texas Universal Triangular Slipbase System components. The website address is: http://www.txdot.gov/publications/traffic.htm
4. Sign supports shall not be spliced except where shown. Sign support posts shall not be spliced.

ASSEMBLY PROCEDURE

Foundation

1. Prepare 12-inch diameter by 42-inch deep hole. If solid rock is encountered, the depth of the foundation may be reduced such that it is embedded a minimum of 18 inches into the solid rock.
2. The Engineer may permit batches of concrete less than 2 cubic yards to be mixed with a portable, motor-driven concrete mixer. For small placements less than 0.5 cubic yards, hand mixing in a suitable container may be allowed by Engineer. Concrete shall be Class A.
3. Push the pipe end of the slip base stub into the center of the concrete. Rotate the stub back and forth while pushing it down into the concrete to assure good contact between the concrete and stub. Continue to work the stub into the concrete until it is between 2 to 4 inches above the ground.
4. Plumb the stub. Allow a minimum of 4 days to set, unless otherwise directed by the Engineer.
5. The triangular slipbase system is multidirectional and is designed to release when struck from any direction.

Support

1. Cut support so that the bottom of the sign will be 7 to 7.5 feet above the edge of the travelway (i.e., edge of the closest lane) when slip plate is below the edge of pavement or 7 to 7.5 feet above slip plate when the slip plate is above the edge of the travelway. The cut shall be plumb and straight.
2. Attach sign to support using connections shown. When multiple signs are installed on the same support, ensure the minimum clearance between each sign is maintained. See SMD(SLIP-2) for clearances based on sign types.

CONCRETE ANCHOR

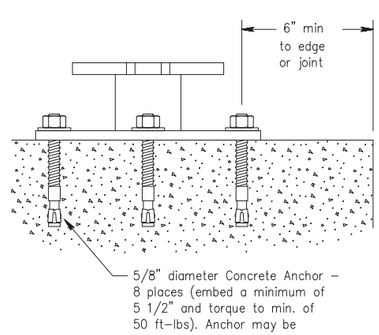

SM RD SGN ASSM TY XXXXX(X)SB(X-XXXX)

Concrete anchor consists of 5/8" diameter stud bolt with UNC series bolt threads on the upper end. Heavy hex nut per ASTM A563, and hardened washer per ASTM F436. The stud bolt shall have a minimum yield and ultimate tensile strength of 50 and 75 KSI, respectively. Nuts, bolts and washers shall be galvanized per Item 445, "Galvanizing." Adhesive type anchors shall have stud bolts installed with Type III epoxy per DMS-6100, "Epoxies and Adhesives." Adhesive anchors may be loaded after adequate epoxy cure time per the manufacturer's recommendations. Top of bolt shall extend at least flush with top of the nut when installed. The anchor, when installed in 4000 psi normal-weight concrete with a 5 1/2" minimum embedment, shall have a minimum allowable tension and shear of 3900 and 3100 psi, respectively.

Texas Department of Transportation
Traffic Operations Division

SIGN MOUNTING DETAILS
SMALL ROADSIDE SIGNS
TRIANGULAR SLIPBASE SYSTEM

SMD(SLIP-1)-08

©TxDOT July 2002	DN: TXDOT	CK: TXDOT	DW: TXDOT	CK: TXDOT
9-08 REVISIONS	CONT	SECT	JOB	HIGHWAY
	0915	17	076	COMMON ST
	DIST	COUNTY		SHEET NO.
	SAT	COMAL		65 OF 97

26B

DISCLAIMER: The use of this standard is governed by the "Texas Engineering Practice Act". No warranty of any kind is made by TxDOT for any purpose whatsoever. TxDOT assumes no responsibility for the conversion of this standard to other formats or for incorrect results or damages resulting from its use.

DATE: 2/8/2024
FILE: W:\00_TGC Project Files\NBR100\CAD\NBR100_GENERAL.dwg

DISCLAIMER: The use of this standard is governed by the "Texas Engineering Practice Act". No warranty of any kind is made by TxDOT for any purpose whatsoever. TxDOT assumes no responsibility for the conversion of this standard to other formats or for incorrect results or damages resulting from its use.

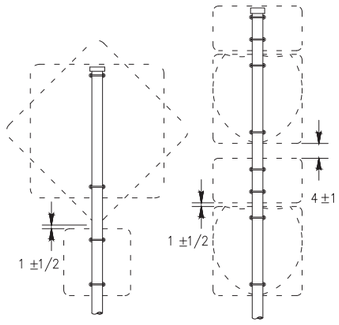

SM RD SGN ASSM TY XXXXX(1)XX(P)

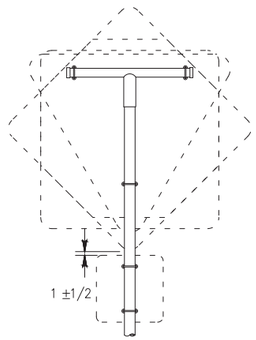

SM RD SGN ASSM TY XXXXX(1)XX(T)

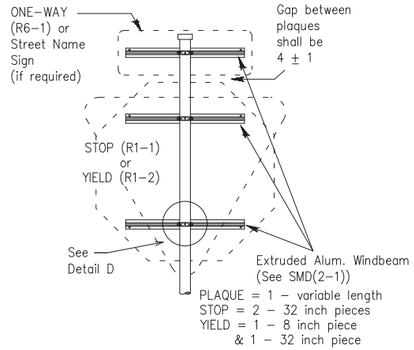

SM RD SGN ASSM TY XXXXX(1)XX(P-BM)

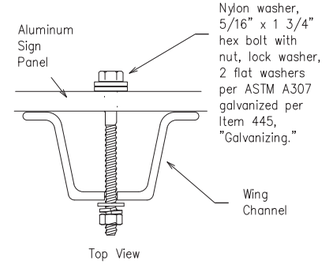

Detail A

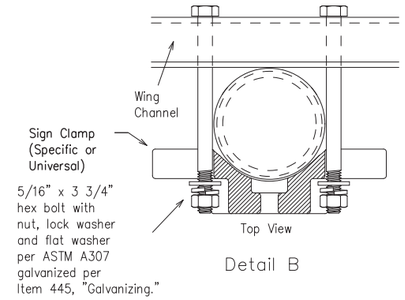

Detail B

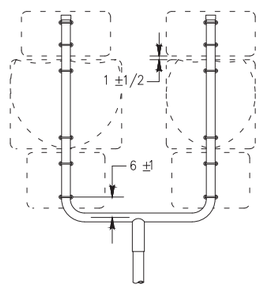

SM RD SGN ASSM TY XXXXX(1)XX(U)

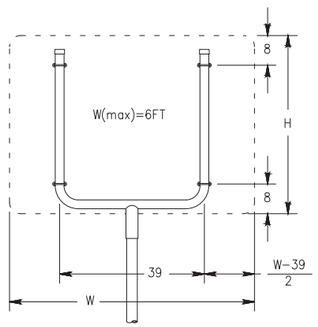

SM RD SGN ASSM TY XXXXX(1)XX(U)

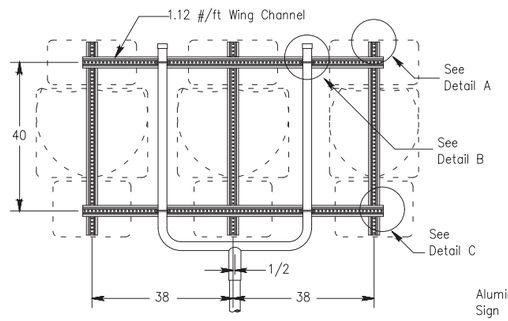

SM RD SGN ASSM TY XXXXX(1)XX(U-WC)
(See Note 11)

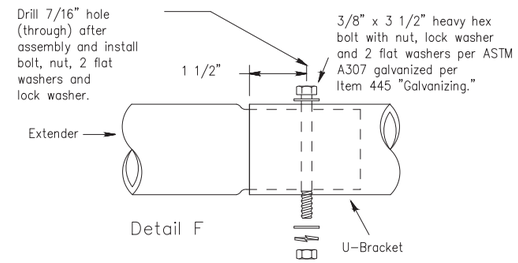

Detail F

Splices shall only be allowed behind the sign substrate.

GENERAL NOTES:

1.

SIGN SUPPORT	# OF POSTS	MAX. SIGN AREA
10 BWG	1	16 SF
10 BWG	2	32 SF
Sch 80	1	32 SF
Sch 80	2	64 SF

2. The Engineer may require that a Schedule 80 post be used in place of a 10 BWG where a sign height is abnormally high due to a fill slope.
3. Sign supports shall not be spliced except where shown. Sign support posts shall not be spliced.
4. Aluminum sign blanks shall conform to Departmental Material Specifications DMS-7110 and shall have the following minimum thicknesses: 0.080 for signs less than 7.5 sq. ft., 0.100 for signs 7.5 to 15 sq. ft., and 0.125 for signs greater than 15 sq. ft.
5. Signs that require specific supports due to reasons in addition to windloading are indicated on the "REQUIRED SUPPORT" table on this sheet.
6. For horizontal rectangular signs fabricated from flat aluminum, T-brackets are used for signs 24 inches or less in height. U-brackets are used for signs of greater height.
7. When two triangular slipbase supports are used to support a single sign, they shall not be "rigidly" connected to each other except through the sign panel. This will allow each support to act independently when impacted by an errant vehicle.
8. Wing channel shall meet ASTM A 1011 SS Gr 50 and be galvanized per ASTM A 123.
9. Excess pipe, wing channel, or windbeam shall be cut off so that it does not extend beyond the sign panel (i.e., excess support shall not be visible when the sign is viewed from the front.) Repair galvanized coating at cut support ends per Item 445, "Galvanizing."
10. Additional route markers may be added vertically, provided the total sign area does not exceed the maximum allowable amount per Note 1.
11. Additional sign clamp required on the "T-bracket" post for 24 inch height signs. Place the clamp 3 inches above bottom of sign when possible.
12. Post open ends shall be fitted with Friction Caps.
13. Sign blanks shall be the sizes and shapes shown on the plans.

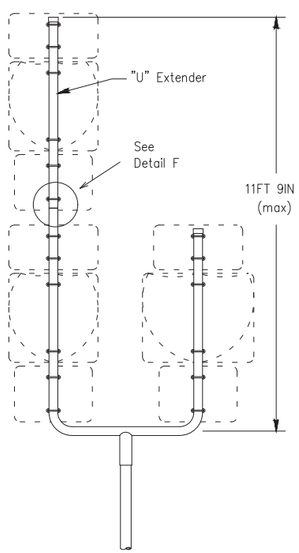

SM RD SGN ASSM TY S80(1)XX(U-1EXT)

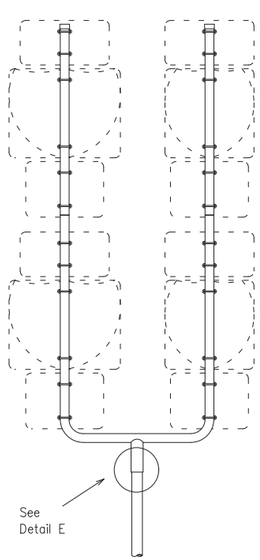

SM RD SGN ASSM TY S80(1)XX(U-2EXT)

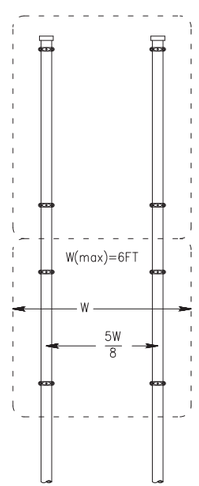

SM RD SGN ASSYM TY XXXXX(2)XX(P)

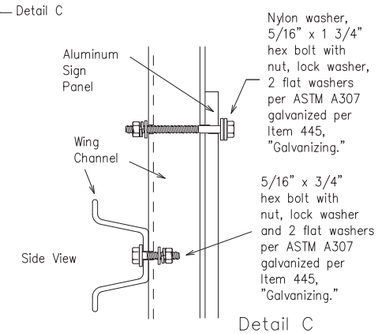

Detail C

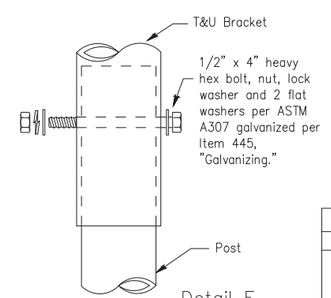

Detail E

SIDE VIEW

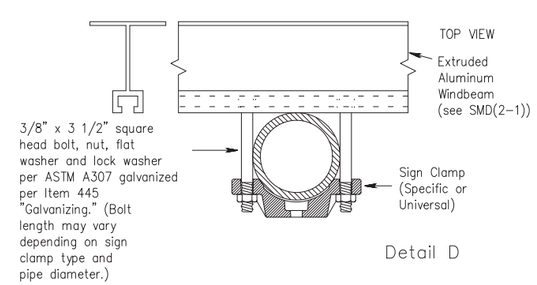

Detail D

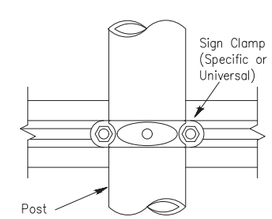

REQUIRED SUPPORT

	SIGN DESCRIPTION	SUPPORT
Regulatory	48-inch STOP sign (R1-1)	TY 10BWG(1)XX(T) TY 10BWG(1)XX(P-BM)
	60-inch YIELD sign (R1-2)	TY 10BWG(1)XX(T) TY 10BWG(1)XX(P-BM)
	48x16-inch ONE-WAY sign (R6-1)	TY 10BWG(1)XX(T) TY 10BWG(1)XX(P-BM)
	36x48, 48x36, and 48x48-inch signs	TY 10BWG(1)XX(T)
	48x60-inch signs	TY S80(1)XX(T)
Warning	48x48-inch signs (diamond or square)	TY 10BWG(1)XX(T)
	48x60-inch signs	TY S80(1)XX(T)
	48-inch Advance School X-ing sign (S1-1)	TY 10BWG(1)XX(T)
	48-inch School X-ing sign (S2-1)	TY 10BWG(1)XX(T)
	Large Arrow sign (W1-6 & W1-7)	TY 10BWG(1)XX(T)

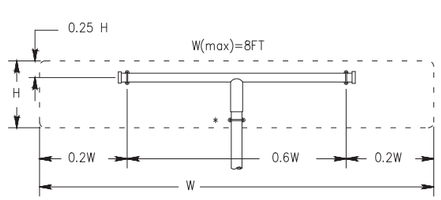

All dimensions are in english unless detailed otherwise.

SM RD SGN ASSM TY XXXXX(1)XX(T)
(* - See Note 12)

FRICTION CAP DETAIL

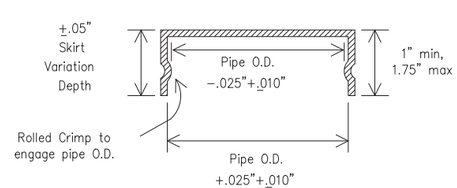

Friction caps may be manufactured from hot rolled or cold rolled steel sheets. The minimum sheet metal thickness shall be 24 gauge for all cap sizes.

The rim edges shall be reasonably straight and smooth. Caps shall be sized and formed in such a manner as to produce a drive-on friction fit and have no tendency to rock when seated on the pipe. The depth shall be sufficient to give positive protection against entrance of rainwater. They shall be free of sharp creases or indentations and show no evidence of metal fracture.

Caps shall have an electrodeposited coating of zinc in accordance with the requirements of ASTM B633 Class FE/ZN 8.

Texas Department of Transportation
Traffic Operations Division

SIGN MOUNTING DETAILS SMALL ROADSIDE SIGNS TRIANGULAR SLIPBASE SYSTEM

SMD(SLIP-2)-08

©TxDOT July 2002

DN: TXDOT	CK: TXDOT	DW: TXDOT	CK: TXDOT
9-08 REVISIONS			

CONT	SECT	JOB	HIGHWAY
0915	17	076	COMMON ST
DIST		COUNTY	SHEET NO.
SAT		COMAL	66 OF 97

26C

DATE: 2/8/2024
FILE: W:\00_TGC Project Files\NBR100\CAD\NBR100_GENERAL.dwg

DISCLAIMER: The use of this standard is governed by the "Texas Engineering Practice Act". No warranty of any kind is made by TxDOT for any purpose whatsoever. TxDOT assumes no responsibility for the conversion of this standard to other formats or for incorrect results or damages resulting from its use.

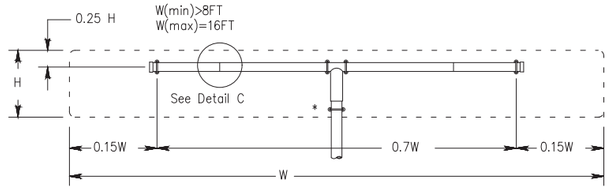

SM RD SGN ASSM TY XXXXX(1)XX(T-2EXT)
(* – See Note 12)

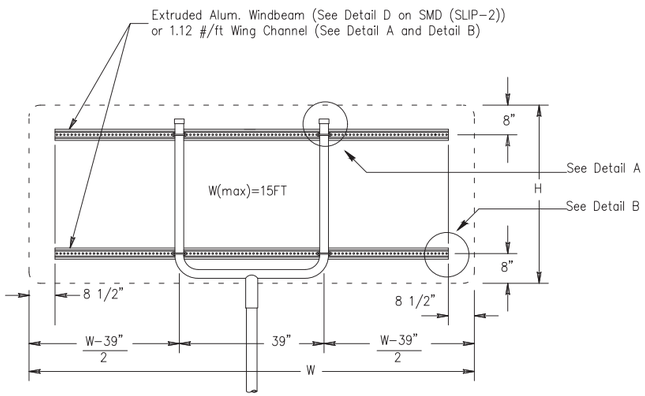

SM RD SGN ASSM TY XXXXX(1)XX(U-XX)

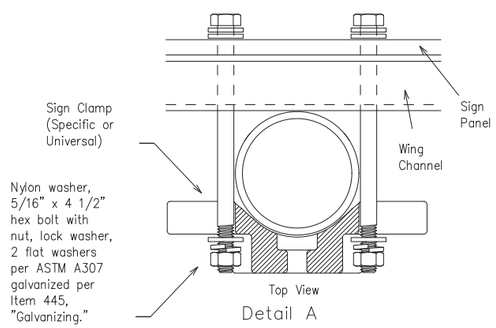

Detail A

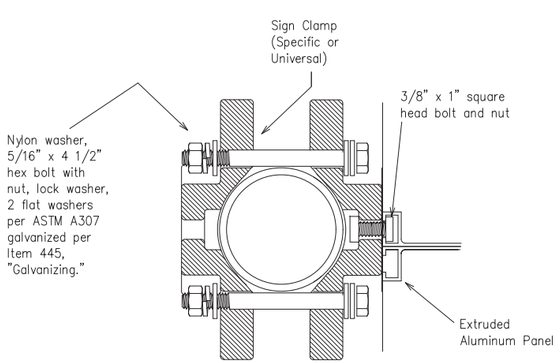

Detail D
EXTRUDED ALUMINUM SIGN WITH T BRACKET

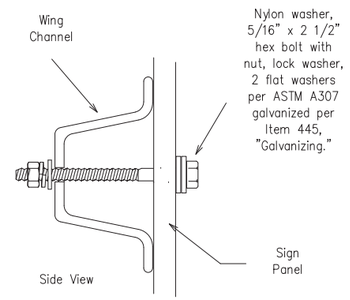

Detail B

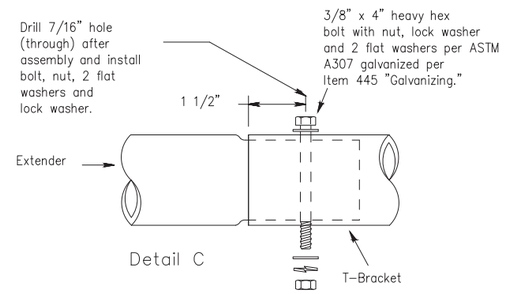

Detail C

Splices shall only be allowed behind the sign substrate.

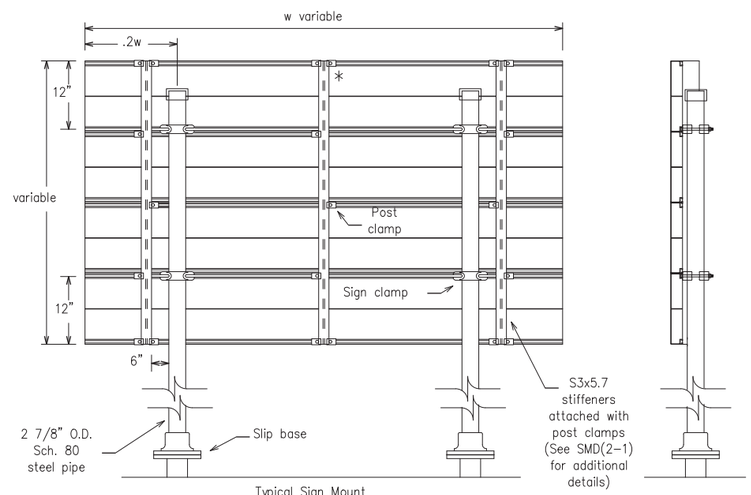

Typical Sign Mount
SM RD SGN ASSM TY S80(2)XX(P-EXAL)
* Additional stiffener placed at approximate center of signs when sign width is greater than 10'.

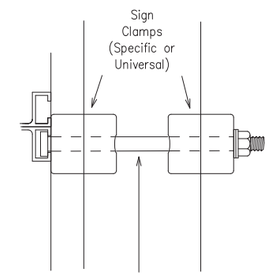

3/8" x 4 1/2"
square head
bolt, nut,
flat washer
and lock washer per
ASTM A307 galvanized
per Item 445,
"Galvanizing."

Detail E

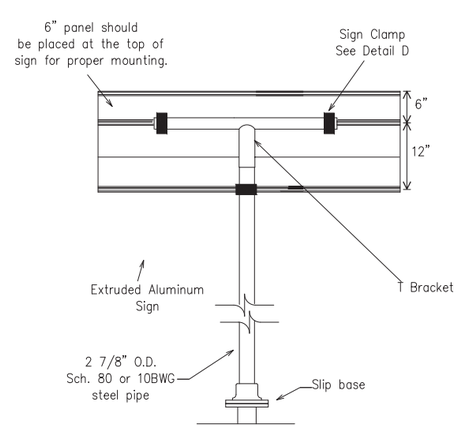

Extruded Aluminum Sign
With T Bracket

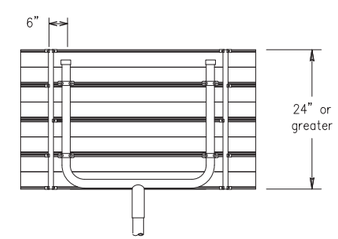

Use Extruded Alum. Windbeam as stiffeners
See SMD (2-1) for additional details

See Detail E
for clamp installation

GENERAL NOTES:

1.

SIGN SUPPORT	# OF POSTS	MAX. SIGN AREA
10 BWG	1	16 SF
10 BWG	2	32 SF
Sch 80	1	32 SF
Sch 80	2	64 SF

2. The Engineer may require that a Schedule 80 post be used in place of a 10 BWG where a sign height is abnormally high due to a fill slope.
3. Sign supports shall not be spliced except where shown. Sign support posts shall not be spliced.
4. Aluminum sign blanks shall conform to Departmental Material Specifications DMS-7110 and shall have the following minimum thicknesses: 0.080 for signs less than 7.5 sq. ft., 0.100 for signs 7.5 to 15 sq. ft., and 0.125 for signs greater than 15 sq. ft.
5. Signs that require specific supports due to reasons in addition to windloading are indicated on the "REQUIRED SUPPORT" table on this sheet.
6. For horizontal rectangular signs fabricated from flat aluminum, T-brackets are used for signs 24 inches or less in height. U-brackets are used for signs of greater height.
7. When two triangular slipbase supports are used to support a single sign, they shall not be "rigidly" connected to each other except through the sign panel. This will allow each support to act independently when impacted by an errant vehicle.
8. Wing channel shall meet ASTM A 1011 SS Gr 50 and be galvanized per ASTM A 123.
9. Excess pipe, wing channel, or windbeam shall be cut off so that it does not extend beyond the sign panel (i.e., excess support shall not be visible when the sign is viewed from the front.) Repair galvanized coating at cut support ends per Item 445, "Galvanizing."
10. Sign blanks shall be the sizes and shapes shown on the plans.
11. Additional sign clamp required on the "T-bracket" post for 24 inch high signs. Place the clamp 3 inches above bottom of sign when possible.
12. Post open ends shall be fitted with Friction Caps.

REQUIRED SUPPORT

	SIGN DESCRIPTION	SUPPORT
Regulatory	48-inch STOP sign (R1-1)	TY 10BWG(1)XX(T) TY 10BWG(1)XX(P-BM)
	60-inch YIELD sign (R1-2)	TY 10BWG(1)XX(T) TY 10BWG(1)XX(P-BM)
	48x16-inch ONE-WAY sign (R6-1)	TY 10BWG(1)XX(T) TY 10BWG(1)XX(P-BM)
	36x48, 48x36, and 48x48-inch signs	TY 10BWG(1)XX(T)
	48x60-inch signs	TY S80(1)XX(T)
Warning	48x48-inch signs (diamond or square)	TY 10BWG(1)XX(T)
	48x60-inch signs	TY S80(1)XX(T)
	48-inch Advance School X-ing sign (S1-1)	TY 10BWG(1)XX(T)
	48-inch School X-ing sign (S2-1)	TY 10BWG(1)XX(T)
	Large Arrow sign (W1-6 & W1-7)	TY 10BWG(1)XX(T)

Texas Department of Transportation
Traffic Operations Division

SIGN MOUNTING DETAILS
SMALL ROADSIDE SIGNS
TRIANGULAR SLIPBASE SYSTEM

SMD(SLIP-3)-08

©TxDOT July 2002

DN: TXDOT	CK: TXDOT	DW: TXDOT	CK: TXDOT

9-08 REVISIONS

CONT	SECT	JOB	HIGHWAY
0915	17	076	COMMON ST
DIST		COUNTY	SHEET NO.
SAT		COMAL	67 OF 97

26D

DATE: 2/8/2024
FILE: W:\00_TGC Project Files\NBR100\CAD\NBR100_GENERAL.dwg

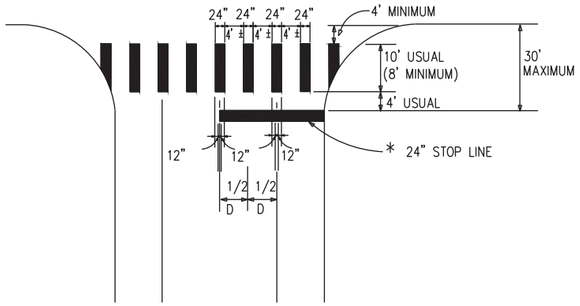

TWO LANES WITH SHOULDERS

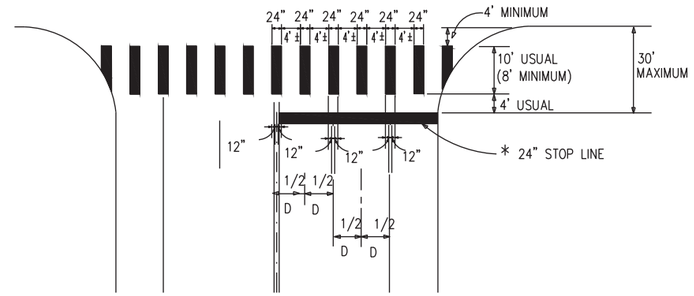

FOUR LANES WITH SHOULDERS

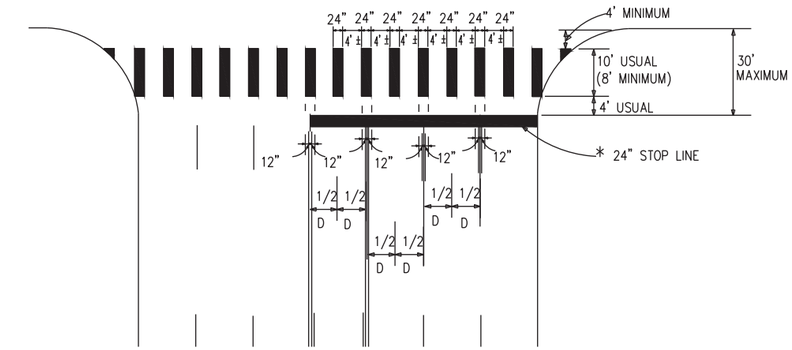

MULTI – LANES

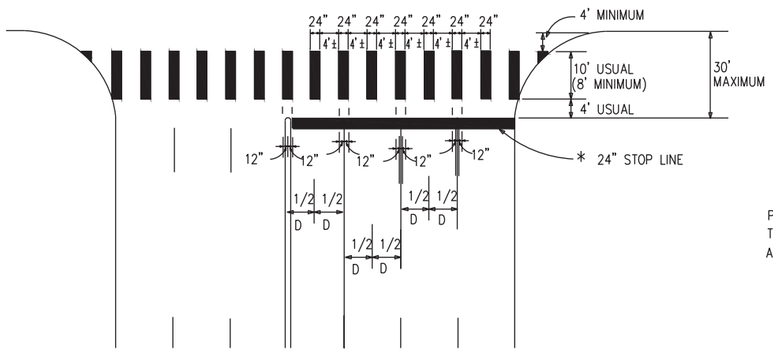

MULTI – LANE WITH MEDIAN

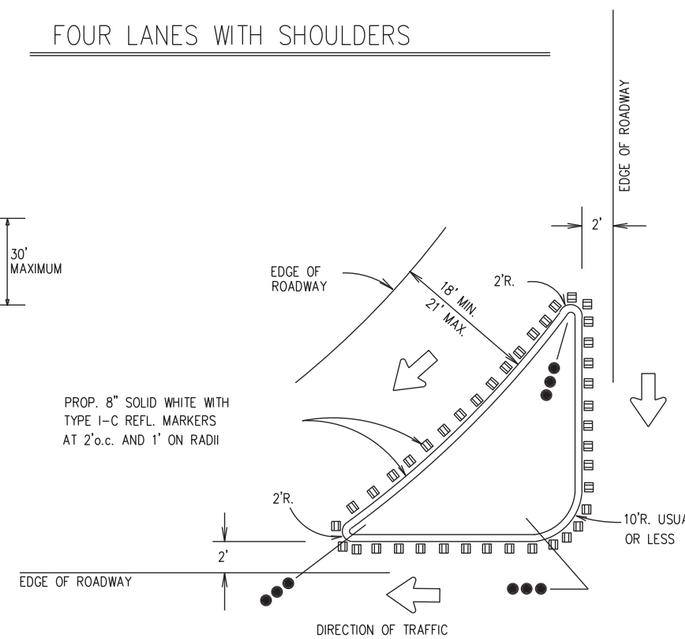

TYPICAL RIGHT TURN ISLAND

WITH DELINEATION

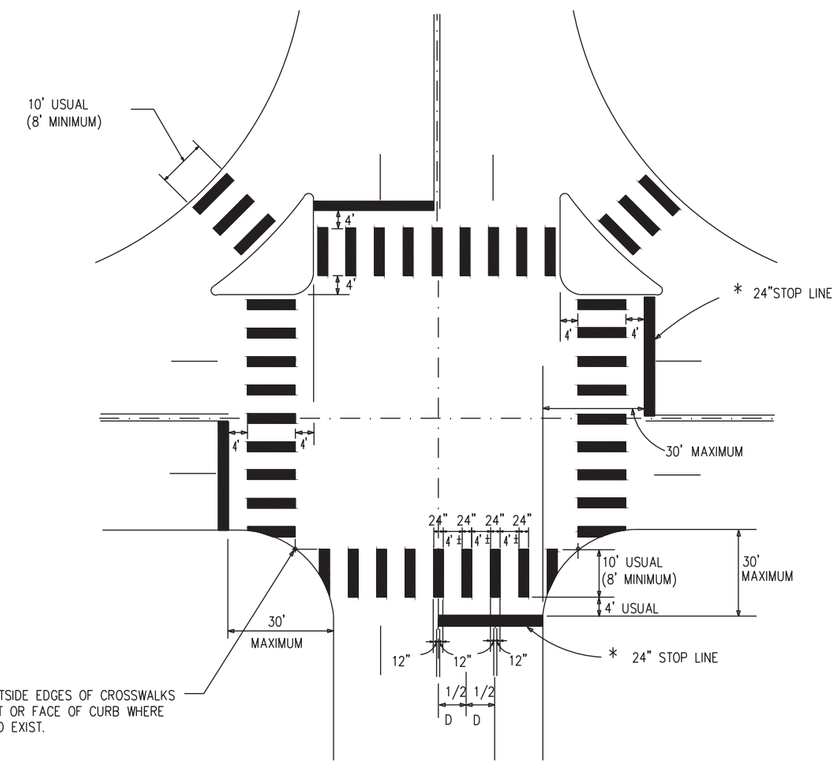

INTERSECTION WITH RIGHT – TURN ISLANDS

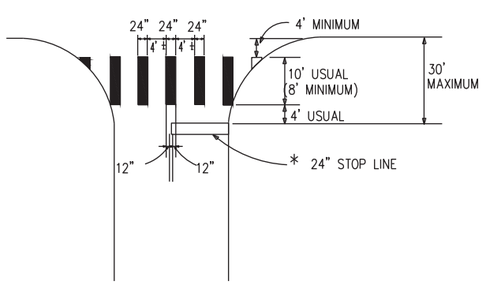

TWO LANES

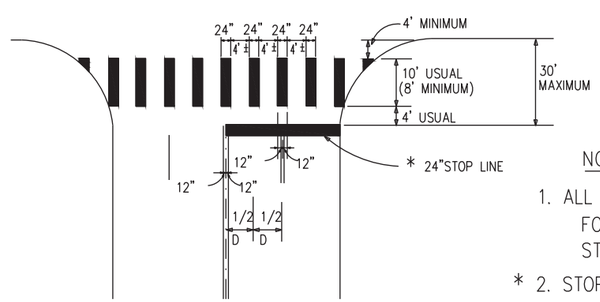

FOUR LANES

NOTES:

1. ALL LONGITUDINAL LINES FORMING CROSSWALK AND STOP LINES SHALL BE WHITE
* 2. STOP LINES AS REQUIRED ON DETAILED PAVEMENT MARKING PLANS.
3. "D" IS EQUAL TO ONE HALF THE DISTANCE.

San Antonio District Standard

TYPICAL CROSSWALK DETAILS

TCD–05

©2006 Texas Department of Transportation

REVISIONS	FED.RD. DIV.NO.	FEDERAL AID PROJECT NO.		SHEET NO.
DEC 1999	6			68 OF 97
AUG 2005	STATE	DIST.	COUNTY	
	TEXAS	SAT	COMAL	
	CONT.	SECT.	JOB	HIGHWAY NO.
	0915	17	076	COMMON ST

2/8/2024
W:\00_TGC Project Files\NBR100\CAD\NBR100_GENERAL.dwg

LEVELS DISPLAYED

1	2	3	4	5	6	7	8	9	10	11	12	13	14	15	16
17	18	19	20	21	22	23	24	25	26	27	28	29	30	31	32
33	34	35	36	37	38	39	40	41	42	43	44	45	46	47	48
49	50	51	52	53	54	55	56	57	58	59	60	61	62	63	

ACC:

SIGNALS
3-SECTION 12"
PEDESTRIAN HYBRID BEACON

PROPOSED VEHICLE SIGNALS
12" LED SIGNALS WITH BACKPLATES

R10-23A (24"X30") S-1, S-2
W11-2 (36"X36") W16-9P W16-7PL S-3, S-4
R10-6a (24"X30") S-5, S-6

PROPOSED SIGNS

PED SIGNAL PEDESTRIAN SIGNAL WITH COUNTDOWN W-1, W-2
R10-3EL P1, P2

PROPOSED PEDESTRIAN SIGNALS
LED COUNTDOWN SIGNAL WITH ACCESSIBLE PEDESTRIAN SIGNAL (APS) UNIT

NOTES:

1. THE CONTRACTOR SHALL LOCATE/EXPOSE ALL UTILITIES IN THE IMMEDIATE VICINITY OF THE INTERSECTION. THE CONTRACTOR SHALL NOTIFY DIG-TESS AT 1-800-245-4545 AND THE CITY OF NEW BRAUNFELS PUBLIC WORKS DEPARTMENT AT 830-221-4030 FOR UTILITY LOCATES AT LEAST 48 HOURS IN ADVANCE OF COMMENCING WORK.
2. THE CONTRACTOR SHALL COORDINATE WITH ELECTRICAL SERVICE PROVIDER FOR ELECTRICAL CONNECTION TO SERVICE PEDESTAL.
3. SMALL ROADSIDE SIGN ASSEMBLIES AND SMALL SIGNS ON MAST ARMS TO BE PLACED AS SHOWN OR AS DIRECTED BY CITY OR CITY'S REPRESENTATIVE IF SITE CONDITIONS WARRANT.
4. CONTRACTOR TO CONFIRM SIGN CONFIGURATION WITH CITY OR CITY'S REPRESENTATIVE PRIOR TO SIGNS BEING ORDERED.

PROPOSED CONTROLLER W/ CABINET
PROPOSED PULL BOX-TYPE C
PROPOSED PULL BOX-TYPE E
PROPOSED TRAFFIC SIGNAL HEAD WITH BACKPLATE
PROPOSED PEDESTRIAN SIGNAL HEAD
PROPOSED PEDESTRIAN PUSH BUTTON
PROPOSED TRAFFIC SIGNAL POLE W/ MAST ARM
PROPOSED SMALL SIGN
PROPOSED POWER PEDESTAL
PROPOSED LUMINAIRE ARM
PROPOSED CONDUIT (TRENCH)
PROPOSED CONDUIT (BORE)
PROPOSED POLE IDENTIFICATION
PROPOSED RUN NUMBER
PROPOSED SIGNS

0 20 40 Feet

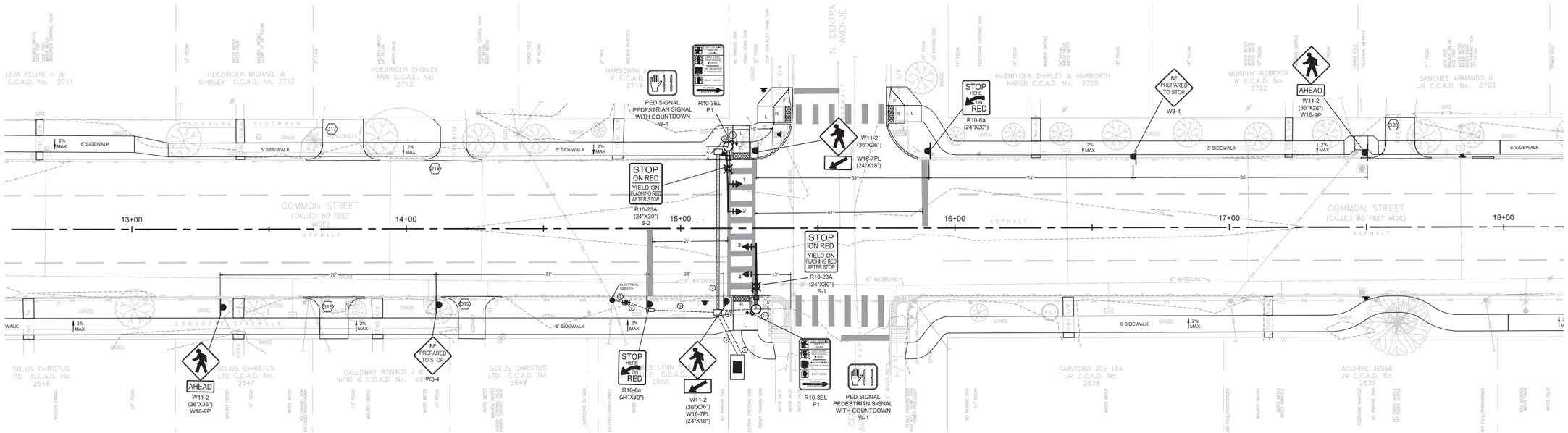

LAYOUT AT N. CENTRAL AND S. CENTRAL AVENUE

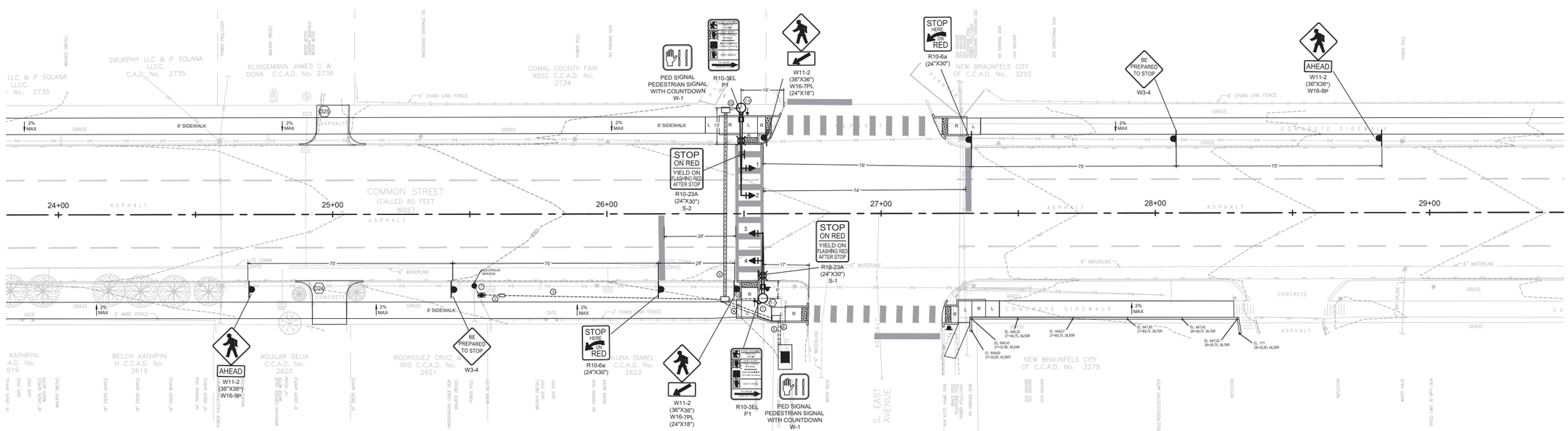

LAYOUT AT N. EAST AND S. EAST AVENUE

REV	DESCRIPTION	DATE	APPR
0	ISSUED FOR BID	02/12/24	AG

TRAFFIC SIGNAL PROPOSED LAYOUT

COMMON STREET PEDESTRIAN IMPROVEMENTS

CITY OF NEW BRAUNFELS
550 Landa Street | New Braunfels, TX 78130

DESIGN BY: KM
DRAWN BY: EFC
CHECKED BY: JG
APPROVED BY: AG

City of New Braunfels

ENGINEER:
THE GOODMAN CORPORATION
3200 TRAVIS, SUITE 200
HOUSTON, TEXAS 77006
www.TheGoodmanCorp.com
(713) 951-7951
TBPELS Firm Registration No. 19990

SURVEYOR:
MBCO ENGINEERING + SURVEYING

STATE OF TEXAS
ROBERT J. GUTEKUNST
129477
LICENSED PROFESSIONAL ENGINEER
02/13/2024

DATE: 02/12/2024
SCALE: AS NOTED

W:\00_TGC Project Files\NBR100\CAD\NBR100_PHB_PLAN_SCHD.dwg 2/7/2024

PHB (CENTRAL AVE) CONDUIT SUMMARY

RUN NO.	WIRE SIZE AND TYPE: CONDUIT (EA) 1"	2"	3"	4"	INSTALL TYPE	ELECTRICAL CONDUCTORS XHHW #4	BARE #4	BARE #8	SIGNAL CABLE 2 CNDR 12 AWG (LUM)	5 CNDR TYP A 14 AWG	7 CNDR TYP A 14 AWG	2 CNDR TYP C 12 AWG	CONDUIT LENGTH (FT)
1		2			T	2	1	2	2				5
2		2			T	2	1	2	2				10
3		2			T	2	1	2	2				25
4		1			T	2	1						20
5			2		T					2	2	2	20
6		1	1		T				1	1	1	1	15
7		1	1		B				1	1	1	1	60
8		1	1		T				1	1	1	1	5
CABLE TOTALS						120	60	80	160	120	120	120	

INSTALL TYPE:
T = TRENCH
B = BORE
E = EXISTING

CONDUIT TOTALS		
	1" TRENCH	0
	2" TRENCH	120
	2" BORE	60
	3" TRENCH	60
	3" BORE	60
	4" TRENCH	0

NOTE: CONDUIT RUN 1 IS FOR ELECTRICAL SERVICE CONNECTION TO EACH PHB.

PHB (EAST AVE) CONDUIT SUMMARY

RUN NO.	WIRE SIZE AND TYPE: CONDUIT (EA) 1"	2"	3"	4"	INSTALL TYPE	ELECTRICAL CONDUCTORS XHHW #4	BARE #4	BARE #8	SIGNAL CABLE 2 CNDR 12 AWG (LUM)	5 CNDR TYP A 14 AWG	7 CNDR TYP A 14 AWG	2 CNDR TYP C 12 AWG	CONDUIT LENGTH (FT)
1		2			T	2	1	2	2				5
2		2			T	2	1	2	2				8
3		2			T	2	1	2	2				80
4		1			T	2	1						20
5		1			T	2	1						15
6			2		T					2	2	2	15
7			1		T			2		2	2	2	20
8		1	1		T				1	1	1	1	13
9		1	1		B				1	1	1	1	68
10		1	1		T				1	1	1	1	7
CABLE TOTALS						256	128	226	274	158	158	158	

INSTALL TYPE:
T = TRENCH
B = BORE
E = EXISTING

CONDUIT TOTALS		
	1" TRENCH	0
	2" TRENCH	241
	2" BORE	68
	3" TRENCH	70
	3" BORE	68
	4" TRENCH	0

NOTE: CONDUIT RUN 1 IS FOR ELECTRICAL SERVICE CONNECTION TO EACH PHB.

PHB (CENTRAL AVE) SIGNAL POLE CHART

POLE NO.	FND TYPE WIND ZONE 80 MPH	DRILLED SHAFT (ITEM 416): 24" DIA TYPE A (LF)	30" DIA TYPE A (LF)	36" DIA TYPE A (LF)	WIRE INSIDE POLES / MAST ARMS, SIGNAL CABLE (ITEM 684): SIG HD 7 CNDR 14 AWG TYP A	PED HD 5 CNDR 14 AWG TYP A	PED BTN 2 CNDR 12 AWG TYP C	ITEM 688 APS PED PUSH BUTTONS	NO. OF PED HEADS	NO. OF VEH HEADS	MAST ARM LENGTH (FT)
T-1	EX		11		50	10	5	1	1	2	24
T-2	EX		11		50	10	5	1	1	2	24
TOTAL			22		100	20	10	2	2	4	

PHB (EAST AVE) SIGNAL POLE CHART

POLE NO.	FND TYPE WIND ZONE 80 MPH	DRILLED SHAFT (ITEM 416): 24" DIA TYPE A (LF)	30" DIA TYPE A (LF)	36" DIA TYPE A (LF)	WIRE INSIDE POLES / MAST ARMS, SIGNAL CABLE (ITEM 684): SIG HD 7 CNDR 14 AWG TYP A	PED HD 5 CNDR 14 AWG TYP A	PED BTN 2 CNDR 12 AWG TYP C	ITEM 688 APS PED PUSH BUTTONS	NO. OF PED HEADS	NO. OF VEH HEADS	MAST ARM LENGTH (FT)
T-1	EX		11		50	10	5	1	1	2	32
T-2	EX		11		50	10	5	1	1	2	24
TOTAL			22		100	20	10	2	2	4	

TRAFFIC SIGNAL SIGNS SUMMARY (CENTRAL AVE)

SIGN NO.	TYPE	LEGEND	LOCATION
S-1	R10-23A	CROSSWALK STOP ON RED	ON T-1 ARM
S-2	R10-23A	CROSSWALK STOP ON RED	ON T-2 ARM
S-3	W11-2 W16-9P	PED CROSSING AHEAD ASSEMBLY	26' ADV OF STOP BAR
S-4	W11-2 W16-9P	PED CROSSING AHEAD ASSEMBLY	76' ADV OF STOP BAR
S-5	R10-6L	STOP HERE ON RED	STOP BAR
S-6	R10-6L	STOP HERE ON RED	STOP BAR
S-7	W11-2 W16-7PL	PED CROSSING ASSEMBLY	CROSSWALK
S-8	W11-2 W16-7PL	PED CROSSING ASSEMBLY	CROSSWALK
P-1	R10-3ER	PUSHBUTTON INSTRUCTIONS	ON T-1 POLE
P-2	R10-3EL	PUSHBUTTON INSTRUCTIONS	ON T-2 POLE
W-1		COUNTDOWN PED SIGNAL	ON T-1 POLE
W-2		COUNTDOWN PED SIGNAL	ON T-2 POLE

TRAFFIC SIGNAL SIGNS SUMMARY (EAST AVE)

SIGN NO.	TYPE	LEGEND	LOCATION
S-1	R10-23A	CROSSWALK STOP ON RED	ON T-1 ARM
S-2	R10-23A	CROSSWALK STOP ON RED	ON T-2 ARM
S-3	W11-2 W16-9P	PED CROSSING AHEAD ASSEMBLY	26' ADV OF STOP BAR
S-4	W11-2 W16-9P	PED CROSSING AHEAD ASSEMBLY	76' ADV OF STOP BAR
S-5	R10-6L	STOP HERE ON RED	STOP BAR
S-6	R10-6L	STOP HERE ON RED	STOP BAR
S-7	W11-2 W16-7PL	PED CROSSING ASSEMBLY	CROSSWALK
S-8	W11-2 W16-7PL	PED CROSSING ASSEMBLY	CROSSWALK
P-1	R10-3ER	PUSHBUTTON INSTRUCTIONS	ON T-1 POLE
P-2	R10-3EL	PUSHBUTTON INSTRUCTIONS	ON T-2 POLE
W-1		COUNTDOWN PED SIGNAL	ON T-1 POLE
W-2		COUNTDOWN PED SIGNAL	ON T-2 POLE

ELECTRICAL SERVICE DATA (AT BOTH CENTRAL AVE AND EAST AVE)

ELECTRICAL SERVICE DESCRIPTION [SEE ED(5) AND ED(6)]	SERVICE CONDUIT SIZE	SERVICE CONDUCTORS NO./SIZE	SAFETY SWITCH AMPS	MAIN DISCONNECT CKT. BRK. POLE/AMP	TWO-POLE CONTACTOR AMPS	PANEL BD./LOAD CENTER AMP RATING (MIN)	CIRCUIT NO.	BRANCH CKT. BRK. POLE/AMPS	KVA LOAD
TY D (120/240)070(NS)AL(E)PS(U)	2" PVC	3/#4	N/A	2P/70	30	100	1.	1P/50	<14.2
							2.	1P/50	

GROUND BOX SUMMARY (ITEM 624)

TYPE	DESCRIPTION	UNIT	QTY
C	NO. 162911 (W/ APRON)	EA	5
E	NO. 122317 (W/ APRON)	EA	2

NOTES:
(1) CONTRACTOR SHALL COORDINATE WITH ELECTRICAL SERVICE PROVIDER FOR ELECTRICAL CONNECTION TO SERVICE PEDESTAL.
(2) ELECTRICAL SERVICE IS REQUIRED FOR BOTH PHBS.

APS MESSAGE CHART

POLE NO.	PED BUTTON PHASE	MESSAGES: REGULAR PUSH BUTTON SPEECH	COUNTDOWN SPEECH	EXTENDED PUSH BUTTON SPEECH
T-1	2, 6			"WAIT TO CROSS AT COMMON STREET"
	4		COUNTDOWN ON	
T-2	2, 6			"WAIT TO CROSS AT COMMON STREET"
	4		COUNTDOWN ON	

NOTE: APS MESSAGES SHALL APPLY AT BOTH PHBS.

REV	DESCRIPTION	DATE	APPR
0	ISSUED FOR BID	02/12/24	AG

TRAFFIC SIGNAL DESIGN TABLES

COMMON STREET PEDESTRIAN IMPROVEMENTS

CITY OF NEW BRAUNFELS
550 Landa Street | New Braunfels, TX 78130

DESIGN BY: KM
DRAWN BY: EFC
CHECKED BY: JG
APPROVED BY: AG

City of New Braunfels

ENGINEER:
THE GOODMAN CORPORATION
3200 TRAVIS, SUITE 200
HOUSTON, TEXAS 77006
www.TheGoodmanCorp.com
(713) 951-7951
TBPELS Firm Registration No. 19990

SURVEYOR:
MBCO ENGINEERING + SURVEYING

STATE OF TEXAS
ROBERT J. GUTEKUNST
129477
LICENSED PROFESSIONAL ENGINEER
02/13/2024

DATE: 02/12/2024
SCALE: AS NOTED

SHEET NUMBER
70 OF 97

W:\00_TGC Project Files\NBR100\CAD\NBR100_PHB_PLAN_SCH2.dwg, 2/7/2024

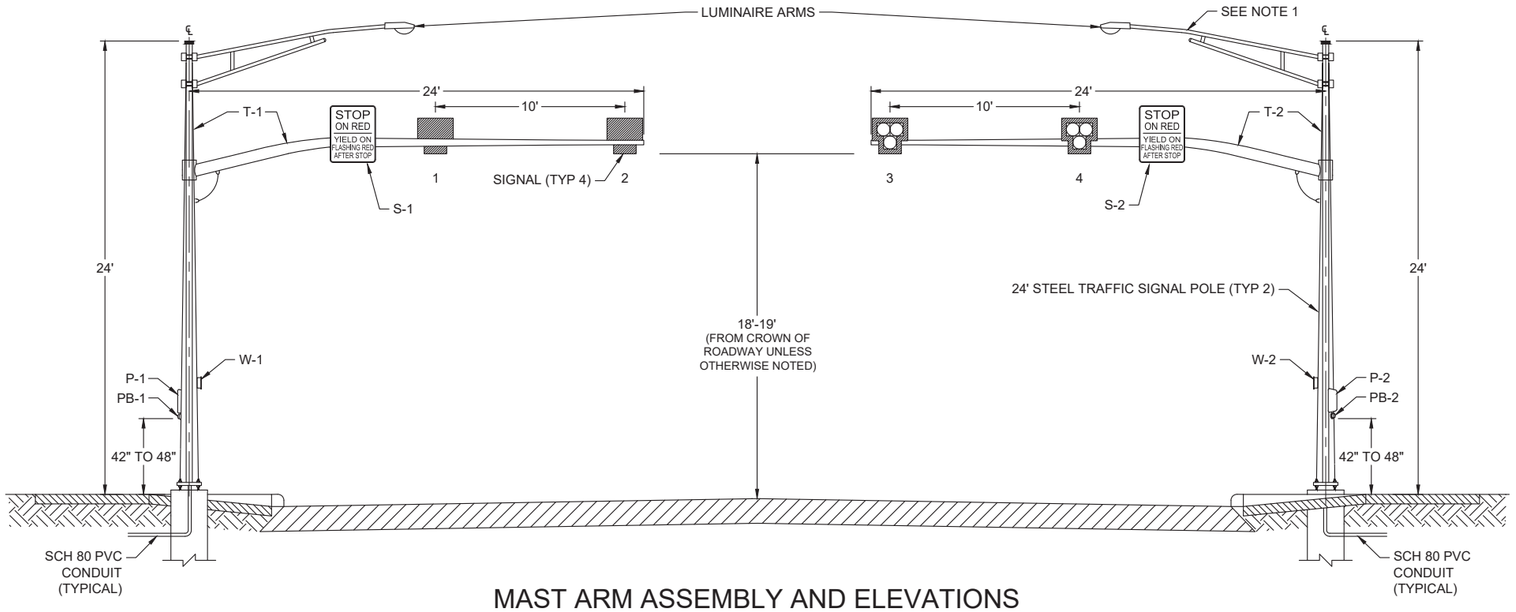

MAST ARM ASSEMBLY AND ELEVATIONS
COMMON ST AT CENTRAL AVE - STA 15+22

NOT TO SCALE

NOTE: SEE "TRAFFIC SIGNAL PROPOSED LAYOUT" (SHEET 69) AND "TRAFFIC SIGNAL DESIGN TABLES" (SHEET 70).

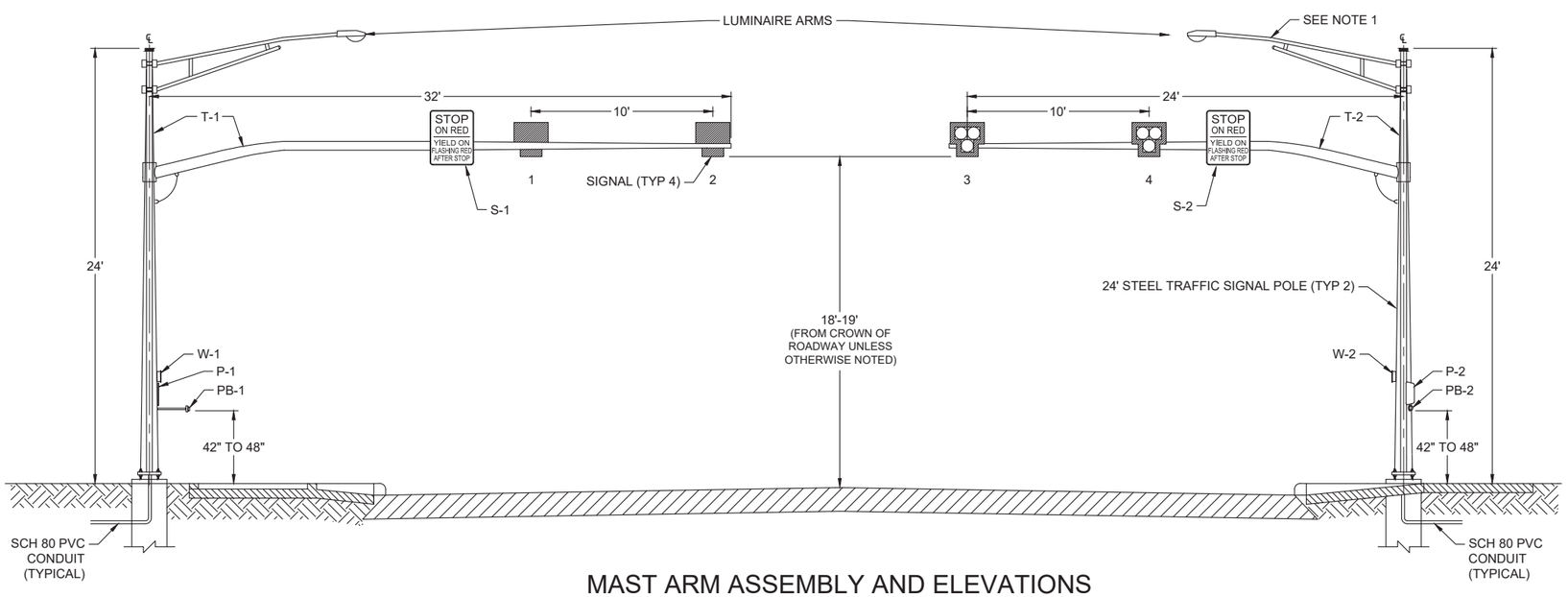

MAST ARM ASSEMBLY AND ELEVATIONS
COMMON ST AT EAST AVE - STA 26+50

NOT TO SCALE

SIGNALS
3-SECTION 12"
PEDESTRIAN HYBRID BEACON

PROPOSED VEHICLE SIGNALS

12" LED SIGNALS WITH BACKPLATES

R10-23A (24"X30") S-1, S-2

W11-2 (36"X36")
W16-9P
W16-7PL
S-3, S-4

R10-6a (24"X30") S-5, S-6

PROPOSED SIGNS

PED SIGNAL
PEDESTRIAN SIGNAL
WITH COUNTDOWN
W-1, W-2

R10-3EL
P1, P2

PROPOSED PEDESTRIAN SIGNALS

LED COUNTDOWN SIGNAL WITH
ACCESSIBLE PEDESTRIAN SIGNAL (APS) UNIT

NOTES:

1. INSTALL LUMINAIRE ARM TO AVOID CONFLICTS WITH COMMUNICATION LINES AND ELECTRICAL OVERHEAD ELECTRIC LINES. A MINIMUM OF 3' SEPARATION IS REQUIRED FROM INSULATED SECONDARY LINES AND A MINIMUM OF 10' SEPARATION IS REQUIRED FROM PRIMARY LINES. IF CONFLICT WITH INSULATED SECONDARY LINES ARE NOT ABLE TO BE MITIGATED, CONTACT NEW BRAUNFELS UTILITY (NBU) TO COORDINATE POTENTIAL RELOCATION OUT OF CONFLICT.

REV	DESCRIPTION	DATE	APPR
0	ISSUED FOR BID	02/12/24	AG

TRAFFIC SIGNAL ELEVATIONS

COMMON STREET PEDESTRIAN IMPROVEMENTS

CITY OF NEW BRAUNFELS
550 Landa Street | New Braunfels, TX 78130

DESIGN BY: KM
DRAWN BY: EFC
CHECKED BY: JG
APPROVED BY: AG

City of New Braunfels

ENGINEER:
THE GOODMAN CORPORATION
3200 TRAVIS, SUITE 200
HOUSTON, TEXAS 77006
www.TheGoodmanCorp.com
(713) 951-7951
TBPELS Firm Registration No. 19990

SURVEYOR:
MBCO ENGINEERING + SURVEYING

STATE OF TEXAS
ROBERT J. GUTEKUNST
129477
LICENSED PROFESSIONAL ENGINEER
02/13/2024

DATE: 02/12/2024
SCALE: AS NOTED

SHEET NUMBER
71 OF 97

W:\00_TGC Project Files\NBR100\CAD\NBR100_PHB_PLAN_SCH2.dwg, 2/7/2024

DISCLAIMER:
The use of this standard is governed by the "Texas Engineering Practice Act". No warranty of any kind is made by TxDOT for any purpose whatsoever. TxDOT assumes no responsibility for the conversion of this standard to other formats or for incorrect results or damages resulting from its use.

GENERAL NOTES FOR ALL ELECTRICAL WORK

1. The location of all conduits, junction boxes, ground boxes, and electrical services is diagrammatic and may be shifted to accommodate field conditions.

2. Provide new and unused materials. Ensure that all materials and installations comply with the applicable articles of the National Electrical Code (NEC), TxDOT standards and specifications, National Electrical Manufacturers Association (NEMA), and are listed by Underwriters Laboratories (UL) or a Nationally Recognized Testing Lab (NRTL). NRTLs such as Canadian Standard Association (CSA), Intertek Testing Services NA Inc., or FM Approvals LLC can be considered equivalent to UL. Where reference is made to NEMA listed devices, International Electrotechnical Commission (IEC) listed devices will not be considered an acceptable equal to a NEMA listed device. Acceptable devices may have both a NEMA and IEC listing. Faulty fabrication or poor workmanship in any material, equipment, or installation is justification for rejection. Replace or reinstall rejected material or equipment at no additional cost to the Department.

3. Miscellaneous nuts, bolts and hardware, except for high strength bolts, may be stainless steel when plans specify galvanized, provided the bolt size is 1/2 in. or less in diameter.

4. Provide the following test equipment as required by the Engineer to confirm compliance with the contract and the NEC: voltmeter, ammeter, megohm meter (1000 volt DC), ground resistance tester, torque wrenches, and torque screwdrivers. Ensure all equipment has been properly calibrated within the last year. Provide calibration certification to the Engineer upon request. Operate test equipment during inspection as requested by the Engineer.

5. Install grounding as shown on the plans and in accordance with the NEC. Ensure all metallic conduits; metal poles; luminaires; and metal enclosures are bonded to the equipment grounding conductor. Provide stranded bare copper or green insulated grounding conductors. Ground rods, connectors, and bonding jumpers are subsidiary to the various bid items.

6. When required by the Engineer, notify the Department in writing of materials from the Material Producers List (MPL) intended for use on each project. Prequalified materials are listed on the MPL on TxDOT's website under "Roadway Illumination and Electrical Supplies." No substitutions will be allowed for materials on this list.

CONDUIT

A. MATERIALS

1. Provide conduit, junction boxes, fittings, and hardware as per TxDOT Departmental Material Specification (DMS) 11030 "Conduit" and Item 618 "Conduit" of TxDOT's "Standard Specifications For Construction And Maintenance Of Highways, Streets, And Bridges," latest edition. Provide conduits listed under Item 618 on the MPL under "Roadway Illumination and Electrical Supplies." Provide conduit types according to the descriptive code or as shown on the plans. Do not substitute other types of conduits for those shown. Provide liquidtight flexible metal conduit (LFMC) when flexible conduit is called for on galvanized steel rigid metallic conduit (RMC) systems. Provide liquidtight flexible nonmetallic conduit (LFNC) when flexible conduit is called for on polyvinyl chloride (PVC) systems.

2. Provide galvanized steel RMC for all exposed conduits, unless otherwise shown on the plans. Properly bond all metal conduits.

3. Unless otherwise shown on the plans, provide junction boxes with a minimum size as shown in the following table, which applies to the greatest number of conductors entering the box through one conduit with no more than four conduits per box. When a mixture of conductor sizes is present, count the conductors as if all are of the larger size. For situations not applicable to the table, size junction boxes in accordance with NEC.

AWG	3 CONDUCTORS	5 CONDUCTORS	7 CONDUCTORS
#1	10" x 10" x 4"	12" x 12" x 4"	16" x 16" x 4"
#2	8" x 8" x 4"	10" x 10" x 4"	12" x 12" x 4"
#4	8" x 8" x 4"	10" x 10" x 4"	10" x 10" x 4"
#6	8" x 8" x 4"	8" x 8" x 4"	10" x 10" x 4"
#8	8" x 8" x 4"	8" x 8" x 4"	8" x 8" x 4"

4. Junction boxes with an internal volume of less than 100 cu. in. and supported by entering raceways must have threaded entries or hubs identified for the intended purpose and supported by connection of two or more rigid metal conduits. Secure conduit within 3 ft. of the enclosure or within 18 in. of the enclosure if all conduit entries are on the same side. Mechanically secure all junction boxes with an internal volume greater than 100 cu. inches.

5. Provide hot dipped galvanized cast iron or sand cast aluminum outlet boxes for junction boxes containing only 10 AWG or 12 AWG conductors. Do not use die cast aluminum boxes. Size outlet boxes according to the NEC.

6. Do not use intermediate metal conduit (IMC) or electrical metallic tubing (EMT) unless specifically required by the plan sheets. When EMT is called for, provide junction boxes made from galvanized steel sheeting, listed and approved for outdoor use, unless otherwise noted on the plans. Size all galvanized steel junction boxes in accordance with the NEC. Provide junction boxes for IMC conduit systems that meet the same requirements for junction boxes used with RMC systems.

7. Provide PVC junction boxes intended for outdoor use on PVC conduit systems, unless otherwise noted on the plans.

8. Provide PVC elbows in PVC conduit systems, unless otherwise shown on the plans. Use only a flat, high tensile strength polyester fiber pull tape for pulling conductors through the PVC conduit system. When galvanized steel RMC elbows are specifically called for in the plans and any portion of the RMC elbow is buried less than 18 in., ground the RMC elbow by means of a grounding bushing on a rigid metal extension. Grounding of the rigid metal elbow is not required if the entire RMC elbow is encased in a minimum of 2 in. of concrete. PVC extensions are allowed on these concrete encased rigid metal elbows. RMC or PVC elbows are subsidiary to various bid items.

9. When required, provide High-Density Polyethylene (HDPE) conduit with factory installed internal conductors according to Item 622 "Duct Cable." At the Contractor's request and with approval by the Engineer, substitute HDPE conduit with no conductors for bored schedule 40 or schedule 80 PVC conduit bid under Item 618. Ensure bored HDPE substituted for PVC is schedule 40 and of the same size PVC called for in the plans. Ensure the substituted HDPE meets the requirements of Item 622, except that the conduit is supplied without factory-installed conductors. Make the transition of the HDPE conduit to PVC (or RMC elbow when required) at the bore pit. Provide conduit of the size and schedule as shown on the plans. Do not extend substituted conduit into ground boxes or foundations. Provide PVC or galvanized steel RMC elbows as called for at all ground boxes and foundations.

10. Use two-hole straps when supporting 2 in. and larger conduits. On electrical service poles, properly sized stainless steel or hot dipped galvanized one-hole standoff straps are allowed on the service riser conduit.

B. CONSTRUCTION METHODS

1. Provide and install expansion joint conduit fittings on all structure-mounted conduits at the structure's expansion joints to allow for movement of the conduit. In addition, provide and install expansion joint fittings on all continuous runs of galvanized steel RMC conduit externally exposed on structures such as bridges at maximum intervals of 150 ft. When requested by the project Engineer, supply manufacturer's specification sheet for expansion joint conduit fittings. Repair or replace expansion joint fittings that do not allow for movement at no additional cost to the Department. Provide the method of determining the amount of expansion to the Engineer upon request. Do not use LFMC or LFNC as a substitute for the required expansion conduit fittings.

2. Space all conduit supports at maximum intervals of 5 ft. Install conduit spacers when attaching metal conduit to surface of concrete structures. See "Conduit Mounting Options" on ED(2). Install conduit support within 3 ft. of all enclosures and conduit terminations.

3. Do not attach conduit supports directly to pre-stressed concrete beams except as shown specifically in the plans or as approved by the Engineer.

4. Unless otherwise shown on the plans, jack or bore conduit placed beneath existing roadways, driveways, sidewalks, or after the base or surfacing operation has begun. Backfill and compact the bore pits below the conduit per Item 476 "Jacking, Boring, or Tunneling Pipe or Box" prior to installing conduit or duct cable to prevent bending of the connections.

5. When placing conduit in the sub-grade of new roadways, backfill all trenches with excavated material unless otherwise noted on the plans. When placing conduit in the sub-base of new roadways, backfill all trenches with cement-stabilized base as per requirements of Items 110 "Excavation", 400 "Excavation and Backfill for Structures", 401 "Flowable Backfill", 402 "Trench Excavation Protection", and 403 "Temporary Special Shoring."

6. Provide and place warning tape approximately 10 in. above all trenched conduit as per Item 618.

7. During construction, temporarily cap or plug open ends of all conduit and raceways immediately after installation to prevent entry of dirt, debris and animals. Temporary caps constructed of durable duct tape are allowed. Tightly fix the tape to the conduit opening. Clean out the conduit and prove it clear in accordance with Item 618 prior to installing any conductors.

8. Ensure conduit entry into the top of any enclosure is waterproof by installing conduit sealing hubs or using boxes with threaded bosses. This includes surface mounted safety switches, meter cans, service enclosures, auxiliary enclosures and junction boxes. Grounding bushings on water tight sealing hubs are not required.

9. Fit the ends of all PVC conduit terminations with bushings or bell end fittings. Provide and install a grounding type bushing on all metal conduit terminations.

10. Install a bonding jumper from each grounding bushing to the nearest ground rod, grounding lug, or equipment grounding conductor. Ensure all bonding jumpers are the same size as the equipment grounding conductor. Bonding of conduit used as a casing under roadways for duct cable is not required, if the duct extends the full length through the casing.

11. At all electrical services, install a 6 AWG solid copper grounding electrode conductor.

12. Place conduits entering ground boxes so that the conduit openings are between 3 in. and 6 in. from the bottom of the box. See the ground box detail on sheet ED(4).

13. Seal ends of all conduits with duct seal, expandable foam, or by other methods approved by the Engineer. Seal conduit immediately after completion of conductor installation and pull tests. Do not use duct tape as a permanent conduit sealant. Do not use silicone caulk as a conduit sealant.

14. File smooth the cut ends of all mounting strut and conduit. Before installing, paint the field cut ends of all mounting strut and RMC (threaded or non-threaded) with zinc rich paint (94% or more zinc content) to alleviate overspray. Use zinc rich paint to touch up galvanized material as allowed under Item 445 "Galvanizing." Do not paint non-galvanized material with a zinc rich paint as an alternative for materials required to be galvanized.

Texas Department of Transportation

Traffic Operations Division Standard

ELECTRICAL DETAILS CONDUITS & NOTES

ED(1)-14

FILE:	ed1-14.dgn	DN:	CK:	DW:	CK:
©TxDOT	October 2014	CONT	SECT	JOB	HIGHWAY
	REVISIONS	0915	17	076	COMMON ST
		DIST		COUNTY	SHEET NO.
		SAT		COMAL	72 OF 97

71A

DATE: 2/8/2024
FILE: W:\00_TGC Project Files\NBR100\CAD\NBR100_GENERAL.dwg

DISCLAIMER: The use of this standard is governed by the "Texas Engineering Practice Act". No warranty of any kind is made by TxDOT for any purpose whatsoever. TxDOT assumes no responsibility for the conversion of this standard to other formats or for incorrect results or damages resulting from its use.

ELECTRICAL CONDUCTORS

A. MATERIAL INFORMATION

1. Provide Type XHHW insulated conductors in accordance with Departmental Material Specification (DMS)11040 "Conductors" and Item 620 "Electrical Conductors." Provide conductors as listed on the Material Producers List (MPL) on the Department web site under "Roadway Illumination and Electrical Supplies" Item 620. Color code insulated conductors in conformance with the NEC. Identify grounded (neutral) conductors with white insulation. Identify grounding conductors (ground wires) with green insulation or bare conductors. Identify ungrounded (hot) conductors with any color insulation except green, white, or gray. Keep color scheme consistent throughout the wiring system. Identify conductors 6 American Wire Gauge (AWG) and smaller by continuous color jacket. Identify electrical conductors 4 AWG and larger by continuous color jacket or by colored tape. When identifying conductors with colored tape, mark at least 6 in. of the conductor's insulation with half laps of tape.

2. Provide a solid copper 6 AWG grounding electrode conductor to bond the electrical service equipment to the concrete encased grounding electrode or the ground rod at the service location. Connect the grounding electrode conductor to the ground rod with a UL listed connector in accordance with DMS 11040. Connect the grounding electrode conductor to the concrete encased grounding electrode as shown in the plans.

3. Where two or more circuits are present in one conduit or enclosure, permanently identify the conductors of each branch circuit by attaching a non–metallic tag around both circuit conductors at each accessible location. Provide tags with two straps, large enough to indicate circuit number, letter, or other identification as shown in the plans. Print circuit identification on the tag with a permanent marker.

4. Use listed compression or screw type pressure connectors, terminal blocks, or split bolt connectors for splicing as specified in DMS 11040. Use hot melt adhesive tape to fill the gap and seal the ends of heat shrink tubing. Provide UL listed gel–filled insulating splice covers. Splicing materials, insulating materials, breakaway disconnects, splice covers, and fuse holders are subsidiary to various bid items.

B. CONSTRUCTION METHODS

1. Use only a flat, high tensile strength polyester fiber pull tape for pulling conductors through the conduit system. After installing conductors in conduit, perform conductor pull test. If a conductor cannot be freely pulled, make any needed alterations or repairs at no additional cost to the department. Perform insulation resistance tests in accordance with Item 620. Coordinate with the Engineer to witness the tests.

2. Leave 2 ft. minimum, 3 ft. maximum length for each conductor up to the splice in ground boxes. Leave 3 ft. minimum, 4 ft. maximum length of conductor in ground boxes when pulled through with no splice. Leave 1 ft. minimum, 1.5 ft. maximum length of conductor at enclosures, weatherheads and pole bases.

3. Make splices only in junction boxes, ground boxes, pole bases, or electrical enclosures and use only listed compression or screw type pressure connectors, terminal blocks, or split bolt connectors. Insulate splices with heavy wall heat shrink tubing or gel–filled insulating splice covers to provide a watertight splice. Overlap conductor insulation with heat shrink tubing a minimum of 2 in. past both sides of the splice. Where heat shrink tubing may not shrink sufficiently to provide a watertight seal around the individual conductors, prior to heating the tubing, increase the diameter of the conductor insulation using hot melt adhesive tape to provide a watertight seal between the individual conductors and the heat shrink tubing. Ensure the tape extends past the heat shrink tubing. Use hot melt adhesive tape to fill the gap and seal the ends of heat shrink tubing. Heat shrink tubing that appears to have been burned, or overheated, is considered defective and must be replaced.

4. Size and install gel–filled insulating splice covers according to manufacturer's specifications when used in place of heat shrink tubing.

5. Wire nuts with factory applied waterproof sealant may be used for 8 AWG or smaller conductors in above ground junction boxes, but not in pole bases or ground boxes. Install wire nuts in an upright position to prevent the accumulation of water.

6. Support conductors in illumination poles with a J–hook at the top of the pole.

7. When terminating conductors, remove the insulation and jacketing material without nicking the individual strands of the conductor. Conductors with nicked individual conductor strands or removed strands will be considered damaged.

8. Replace conductors and cables that are damaged beyond repair or that fail an insulation resistance test at no additional cost to the department.

9. Do not repair damaged conductors with duct tape, electrical tape, or wire nuts. Use only approved splicing methods.

10. Do not terminate more than one conductor under a single connector, unless the connector is rated for multiple conductors. Do not exceed the pressure connector's listing for maximum number and size of conductors allowed.

11. Install breakaway connectors on conductors bid under Item 620 whenever those conductors pass through a breakaway support device. Follow manufacturer's instructions when terminating conductors to breakaway connectors. Properly torque threaded connections. Proper terminations are critical to the safe operation of breakaway devices. Trim waterproofing boots on breakaway connectors to fit snugly around the conductor to ensure waterproof connection. Only one conductor may enter a single opening in a boot. Provide waterproof boots with the correct number of openings. Leave unused openings factory sealed. Use prequalified breakaway connectors as shown on the MPL.

12. Provide and install a separate stranded equipment grounding conductor (EGC) in all conduits that contain circuit wiring of 50 volts or more. Unless shown elsewhere, size the EGC to be the same size as the largest current carrying conductor contained in the conduit. Ensure all EGCs are bonded together at every accessible location. For traffic signal installations, provide a minimum size 8 AWG EGC. The EGC is paid for under Item 620.

C. TEMPORARY WIRING

1. Install temporary conductors and electrical equipment in accordance with the NEC article "Temporary Installations" and Department standard sheets.

2. Provide a ground fault circuit interrupter (GFCI) for power outlets for portable electrical equipment, power tools, ice machines, ice storage bins and refrigerators located outdoors at grade. GFCI may be any one of the following: molded cord and plug set, receptacle, or circuit breaker type.

3. Use listed wire nuts with factory applied sealant for temporary wiring where approved.

4. Enclose conductor splices within a listed enclosure or ground box, or ensure the splices are more than 10 ft. above grade vertically and more than 5 ft. horizontally from any metal structure. Where installing temporary conductors in areas subject to vehicle traffic or mobile construction equipment, ensure the vertical clearance to ground is at least 18 ft. when measured at the lowest point. Ground messenger wires that support power conductors in conformance with the NEC.

5. Protect and when necessary repair any existing electrical conduits uncovered during the construction process in a timely manner and in conformance with the NEC.

GROUND RODS & GROUNDING ELECTRODES

A. MATERIAL INFORMATION

1. Provide and install a grounding electrode at electrical services. Provide ground rods according to DMS 11040 and the plans. Larger diameter or longer length rods may be called for in some specific locations, see the individual plans sheets. Concrete encased grounding electrodes may be called for in specific locations including electrical service, see individual plan sheets.

B. CONSTRUCTION METHODS

1. Furnish auxiliary ground rods for lightning protection and install in soil, concrete, or both, as called for in the plans. For ground rods installed in concrete, ensure the connection of the conductor to the ground rod is readily accessible for inspection or repairs. For ground rods installed in soil, ensure that the upper end is between 2 to 4 in. below finished grade.

2. Do not place ground rods in the same drilled hole as a timber pole.

3. Install ground rods so the imprinted part number is at the upper end of the rod.

4. Remove all non–conductive coatings such as concrete splatter from the rod at the clamp location.

5. Route all conductors as short and straight as possible for connection to lightning protection ground rods. When a bend is required, ensure a minimum radius bend of four inches for these conductors.

6. Unless otherwise called for in the plans, protect grounding electrode conductors with non–metallic conduit. When protecting grounding electrode conductors with metal conduit, provide and install a grounding type bushing and properly sized bonding jumper on each end of the metal conduit.

7. Written authorization is required before installing a ground rod in a horizontal trench for rocky soil or a solid rock bottom.

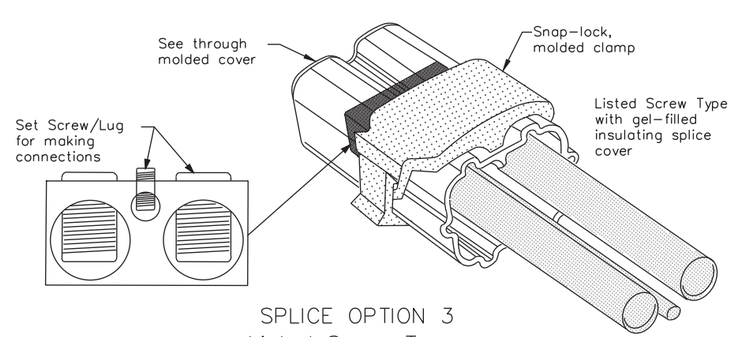

SPLICE OPTION 3
Listed Screw Type

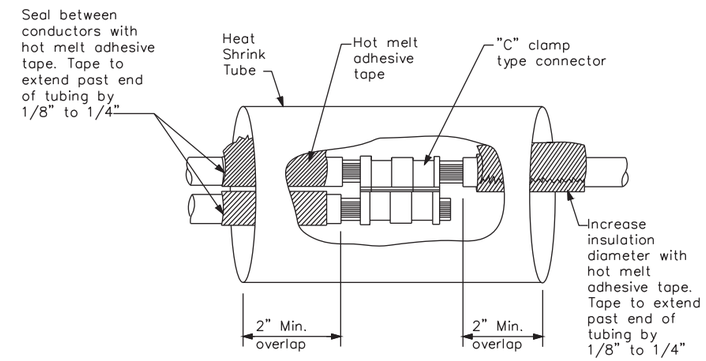

SPLICE OPTION 1
Compression Type

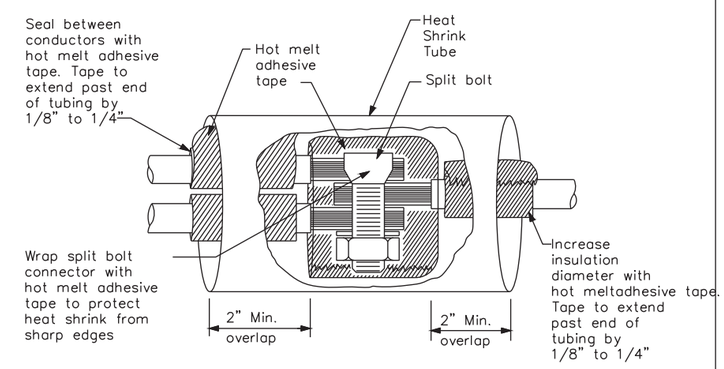

SPLICE OPTION 2
Split Bolt Type

Texas Department of Transportation — Traffic Operations Division Standard

ELECTRICAL DETAILS
CONDUCTORS

ED(3)–14

FILE: ed3–14.dgn	DN: TxDOT	CK: TxDOT	DW: TxDOT	CK: TxDOT	
©TxDOT October 2014	CONT	SECT	JOB	HIGHWAY	
REVISIONS	0915	17	076	COMMON ST	
	DIST		COUNTY	SHEET NO.	
	SAT		COMAL	73 OF 97	

71C

DATE: 2/8/2024
FILE: W:\00_TGC Project Files\NBR100\CAD\NBR100_GENERAL.dwg

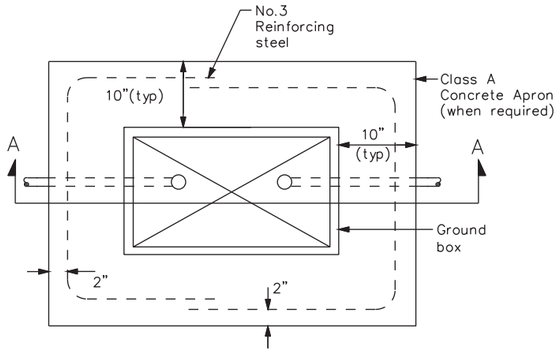

PLAN VIEW

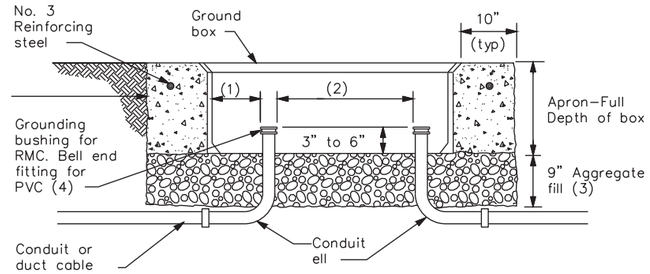

SECTION A – A

APRON FOR GROUND BOX

(1) Uniformly space ends of conduits within the ground box. Position ends of conduits so that ground box walls do not interfere with the installation of grounding bushings or bell end fittings.

(2) Maintain sufficient space between conduits to allow for proper installation of bushing.

(3) Place aggregate under the box, not in the box. Aggregate should not encroach on the interior volume of the box.

(4) Install a grounding bushing on the upper end of all RMC terminating in a ground box. Ground RMC elbows when any part of the elbow is less than 18 in. below the bottom of the ground box. Install a PVC bushing or bell end fitting on the upper end of all PVC conduits terminating in a ground box.

GROUND BOX DIMENSIONS	
TYPE	OUTSIDE DIMENSIONS (INCHES) (Width x Length X Depth)
A	12 X 23 X 11
B	12 X 23 X 22
C	16 X 29 X 11
D	16 X 29 X 22
E	12 X 23 X 17

GROUND BOXES

A. MATERIALS

1. Provide polymer concrete ground boxes measuring 16x30x24 in. (WxLxD) or smaller in accordance with Departmental Material Specification (DMS) 11070 "Ground Boxes" and Item 624 "Ground Boxes."

2. Provide Type A, B, C, D, and E ground boxes as shown in the plans, and as listed on the Material Producers List (MPL) on the Department web site under "Roadway Illumination and Electrical Supplies," Item 624.

3. Ensure ground box cover is correctly labeled in accordance with DMS 11070.

4. Provide larger ground boxes in accordance with Item 624 and as shown in the plans.

B. CONSTRUCTION METHODS

1. Remove all gravel and dirt from conduit. Cap all conduits prior to placing aggregate and setting ground box. Provide Grade 3 or 4 coarse aggregate as shown on Table 2 of Item 302 "Aggregates for Surface Treatments." Ensure aggregate bed is in place and at least 9 inches deep, prior to setting the ground box. Install ground box on top of aggregate.

2. Cast ground box aprons in place. Reinforcing steel may be field bent. Ensure the depth of concrete for the apron extends from finished grade to the top of the aggregate bed under the box. Ground box aprons, including concrete and reinforcing steel, are subsidiary to ground boxes when called for by descriptive code.

3. Keep bolt holes in the box clear of dirt. Bolt covers down when not working in ground boxes.

4. Install all conduits and ells in a neat and workmanlike manner. Uniformly space conduits so grounding bushings and bell end fittings can easily be installed.

5. Temporarily seal all conduits in the ground box until conductors are installed.

6. Permanently seal conduits immediately after the completion of conductor installation and pull tests. Permanently seal the ends of all conduits with duct seal, expandable foam, or other method as approved. Do not use duct tape as a permanent conduit sealant. Do not use silicone caulk as a sealant.

7. When a ground rod is present in a ground box, bond all equipment grounding conductors together and to the ground rod with listed connectors.

8. When a type B or D ground box is stacked to meet volume requirements, it is allowable to cut an appropriately sized hole for conduit entry in the side wall at least 18 inches below grade.

9. If an existing ground box in the contract has a metal cover, bond the cover to the equipment grounding conductor with a 3 ft. long stranded bonding jumper the same size as the grounding conductor. The bonding jumper is subsidiary to various bid items. Verify existing ground boxes with metal covers are shown on the plans, with notes fully describing the work required.

10. If other ground boxes with metal covers are within the project limits but are not part of the contract, the Engineer may direct the Contractor to bond the metal covers, identifying the specific boxes in writing. This work will be paid for separately.

11. Bond metal ground box covers to the grounding conductor with a tank ground type lug.

GROUND BOX COVER DIMENSIONS								
TYPE	DIMENSIONS (INCHES)							
	H	I	J	K	L	M	N	P
A, B & E	23 1/4	23	13 3/4	13 1/2	9 7/8	5 1/8	1 3/8	2
C & D	30 1/2	30 1/4	17 1/2	17 1/4	13 1/4	6 3/4	1 3/8	2

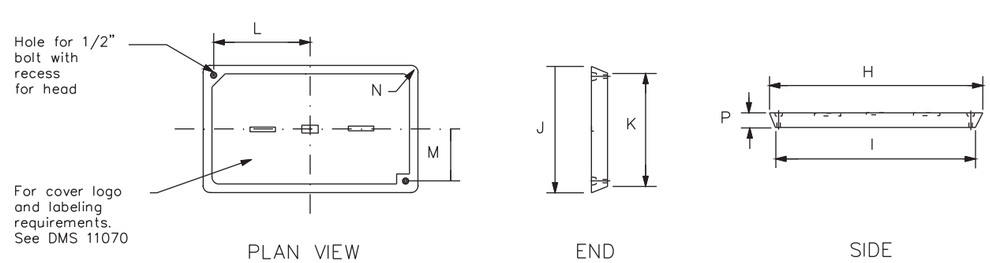

PLAN VIEW END SIDE

GROUND BOX COVER

Texas Department of Transportation

Traffic Operations Division Standard

ELECTRICAL DETAILS GROUND BOXES

ED(4)–14

FILE: ed4–14.dgn	DN: TxDOT	CK: TxDOT	DW: TxDOT	CK: TxDOT
©TxDOT October 2014	CONT	SECT	JOB	HIGHWAY
REVISIONS	0915	17	076	COMMON ST
	DIST		COUNTY	SHEET NO.
	SAT		COMAL	74 OF 97

71D

DISCLAIMER: The use of this standard is governed by the "Texas Engineering Practice Act". No warranty of any kind is made by TxDOT for any purpose whatsoever. TxDOT assumes no responsibility for the conversion of this standard to other formats or for incorrect results or damages resulting from its use.

DATE: 2/8/2024
FILE: W:\00_TGC Project Files\NBR100\CAD\NBR100_GENERAL.dwg

DISCLAIMER: The use of this standard is governed by the "Texas Engineering Practice Act". No warranty of any kind is made by TxDOT for any purpose whatsoever. TxDOT assumes no responsibility for the conversion of this standard to other formats or for incorrect results or damages resulting from its use.

ELECTRICAL SERVICES NOTES

1. Provide new materials. Ensure installation and materials comply with the applicable provisions of the National Electrical Code (NEC) and National Electrical Manufacturers Association (NEMA) standards. Ensure material is Underwriters Laboratories (UL) listed. Provide and install electrical service conduits, conductors, disconnects, contactors, circuit breaker panels, and branch circuit breakers as shown on the Electrical Service Data chart in the plans. Faulty fabrication or poor workmanship in material, equipment, or installation is justification for rejection. Where manufacturers provide warranties and guarantees as a customary trade practice, furnish these to the State.

2. Provide electrical services in accordance with Electrical Details standard sheets, Departmental Material Specification (DMS) 11080 "Electrical Services,"DMS 11081 "Electrical Services–Type A," DMS 11082 "Electrical Services–Type C," DMS 11083 "Electrical Services–Type D," DMS 11084 "Electrical Services–Type T," DMS 11085 "Electrical Services–Pedestal (PS)", and Item 628 "Electrical Services" of the Standard Specifications. Provide electrical service types A, C, and D, as listed on the Material Producers List (MPL) on the Department web site under "Roadway Illumination and Electrical Supplies," Item 628. Provide other service types as detailed on the plans.

3. Provide all work, materials, services, and any incidentals needed to install a complete electrical service as specified in the plans.

4. Coordinate with the Engineer and the utility provider for metering and compliance with utility requirements. Primary line extensions, connection charges, meter charges, and other charges by the utility company to provide power to the location are paid for in accordance with Item 628. Get approval for the costs associated with these charges prior to engaging the utility company to do the work. Consult with the utility provider to determine costs and requirements, and coordinate the work as approved.

5. The enclosure manufacturer will provide Master Lock Type 2 with brass tumblers keyed #2195 for all custom electrical enclosures. Installing Contractor is to provide Master Lock #2195 Type 2 with brass tumblers for "off the shelf" enclosures. Master Lock #2195 keys and locks become property of the State. Unless otherwise approved, do not energize electrical service equipment until locks are installed.

6. Enclosures with external disconnects that de–energize all equipment inside the enclosure do not need a dead front trim. Protect incoming line terminations from incidental contact as required by the NEC.

7. When galvanized is specified for nuts, screws, bolts or miscellaneous hardware, stainless steel may be used.

8. Provide wiring and electrical components rated for 75°C. Provide red, black, and white colored XHHW service entrance conductors of minimum size 6 American Wire Gauge (AWG). Identify size 6 AWG conductors by continuous color jacket. Identify electrical conductors sized 4 AWG and larger by continuous color jacket or by colored tape. Mark at least 6 inches of the conductor's insulation with half laps of colored tape, when identifying conductors. Ensure each service entrance conductor exits through a separately bushed non–metallic opening in the weatherhead. The lengths of the conductors outside the weatherhead are to be 12 inches minimum, 18 inches maximum, or as required by utility.

9. All electrical service conduit and conductors attached to the electrical service including the riser or the elbow below ground are subsidiary to the electrical service. For an underground utility feed, all service conduit and conductors after the elbow, including service conduit and conductors for the utility pole riser when furnished by the Contractor, will be paid for separately.

10. Provide rigid metal conduit (RMC) for all conduits on service, except for the 1/2 in. PVC conduit containing the electrical service grounding electrode conductor. Size the service entrance conduit as shown in the plans. Ensure conduit for branch circuit entry to enclosure is the same size as that shown on the layout sheets for branch circuit conduit. Extend all rigid metal conduits a minimum of 6 inches underground and then couple to the type and schedule of the conduit shown on the layout for that particular branch circuit. Install a grounding bushing on the RMC where it terminates in the service enclosure.

11. Use of liquidtight flexible metal conduit (LFMC) is allowed between the meter and service enclosure when they are mounted 90 to 180 degrees to each other. Size the LFMC the same size as service entrance conduit. LFMC must not exceed 3 feet in length. Strap LFMC within 1 foot of each end. LFMC less than 12 inches in length need not be strapped. Each end of LFMC must have a grounding bushing or be terminated with a grounding fitting. The LFMC must contain a grounded (neutral) conductor. Ensure any bend in LFMC never exceeds 180 degrees. A pull test is required on all installed conductors, with at least six inches of free conductor movement demonstrated to the satisfaction of the Engineer.

12. Ensure all mounting hardware and installation details of services conform to utility company specifications.

13. For all electrical service enclosures listed under Item 628 on the MPL, the UL 508 enclosure manufacturers will prepare and submit a schematic drawing unique to each service. Before shipment to the job site, place the applicable laminated schematic drawings and the laminated plan sheet showing the electrical service data chart used to build the enclosure in the enclosure's data pocket. The installing contractor will copy and laminate the actual project plan sheets detailing all equipment and branch circuits supplied by that service. The laminated plan sheets are to be placed in the service enclosure's document pocket. Reduce 11 in. x 17 in. plan sheets to 8 1/2 in. x 11 in. before laminating. If the installation differs from the plan sheets, the installing contractor is to redline plan sheets before laminating.

14. When providing an "Off The Shelf" Type D or Type T service, provide laminated plan sheets detailing equipment and branch circuits supplied by that service. Reduce 11 in. x 17 in. plan sheets to 8 1/2 in. x 11 in before laminating. Deliver these drawings before completion of the work to the Engineer, instead of placing in enclosure that has no door pocket.

15. Do not install conduit in the back wall of a service enclosure where it would penetrate the equipment mounting panel inside the enclosure. Provide grounding bushings on all metal conduits, and terminate bonding jumpers to grounding bus. Grounding bushings are not required when the end of the metal conduit is fitted with a conduit sealing hub or threaded boss, such as a meter base hub.

SERVICE ASSEMBLY ENCLOSURE

1. Provide threaded hub for all conduit entries into the top of enclosure.

2. Type galvanized steel (GS) enclosures may be used for Type C panelboards and for Type D and T services that do not use an enclosure mounted photocell or lighting contactor. Provide GS enclosures in accordance with DMS 11080, 11082, 11083, and 11084.

3. Provide aluminum (AL) and stainless steel (SS) enclosures for Types A, C, and D in accordance with DMS 11080, 11081, 11082, 11083, and 11084. Do not paint stainless steel.

4. Provide pedestal service (PS) enclosures in accordance with ED(9) and DMS 11080 and 11085. Do not provide GS pedestal services. If GS is shown in the PS descriptive code, provide an AL enclosure.

MAIN DISCONNECT & BRANCH CIRCUIT BREAKERS

1. Field drill flange–mounted remote operator handle if needed, to ensure handle is lockable in both the "On" and "Off" positions.

2. When the utility company provides a transformer larger than 50 KVA, verify that the available fault current is less than the circuit breaker's ampere interrupting capacity (AIC) rating and provide documentation from the electric utility provider to the Engineer.

PHOTOELECTRIC CONTROL

1. Provide photocell as listed on the MPL. Move, adjust, or shield the photocell from stray or ambient night time light to ensure proper operation. Mount photocell facing north when practical. Mount top of pole photocells as shown on Top Mounted Photocell Detail.

* ELECTRICAL SERVICE DATA

Elec. Service ID	Plan Sheet Number	Electrical Service Description	Service Conduit ** Size	Service Conductors No./Size	Safety Switch Amps	Main Ckt. Bkr. Pole/Amps	Two–Pole Contractor Amps	Panelbd/ Loadcenter Amp Rating	Branch Circuit ID	Branch Ckt. Bkr. Pole/Amps	Branch Circuit Amps	KVA Load
SB 183	289	ELC SRV TY A 240/480 100(SS)AL(E)SF(U)	2"	3/#2	100	2P/100	100	N/A	Lighting NB	2P/40	26	28.1
									Lighting SB	2P/40	25	
									Underpass	1P/20	15	
NB Access	30	ELC SRV TY D 120/240 060(NS)SS(E)TS(O)	1 1/4"	3/#6	N/A	2P/60		100	Sig. Controller	1P/30	23	5.3
							30		Luminaires	2P/20	9	
									CCTV	1P/20	3	
2nd & Main	58	ELC SRV TY T 120/240 000(NS)GS(N)SP(O)	1 1/4"	3/#6	N/A	N/A	N/A	70	Flashing Beacon 1	1P/20	4	1.0
									Flashing Beacon 2	1P/20	4	

* Example only, not for construction. All new electrical services must have electrical service data chart specific to that service as shown in the plans.

** Verify service conduit size with utility. Size may change due to utility meter requirements. Ensure conduit size meets the National ELectrical Code.

EXPLANATION OF ELECTRICAL SERVICE DESCRIPTIVE CODE

ELEC SERV TY X XXX/XXX XXX (XX) XX (X) XX (X)

Schematic Type

Service Voltage V / V

Disconnect Amp Rating
000 indicates main lug only/
Typically Type T

(SS)= Safety Switch Ahead of Meter–Check with Utility
(NS)= No safety Switch Ahead of Meter–Check with Utility

Enclosure Type
GS= Galvanized steel("off the shelf")
SS= Stainless steel(Custom Enclosure)See MPL
AL= Aluminum (Custom Enclosure)See MPL

Photocell Mounting Location
(E)= Inside Service/Enclosure Mounted
(T)= Top of pole
(L)= Luminaire mounted
(N)= None/No Photocell or Lighting Contactor Required

Service Support Type
GC= Granite concrete
OC= Other concrete
TP= Timber pole
SP= Steel pole
SF= Steel frame
OT= Pole by others or paid for separately
EX= Existing pole
TS= Service on traffic signal pole
PS= Pedestal Service

O= Overhead Service Feed from Utility
U= Underground Service Feed from Utility

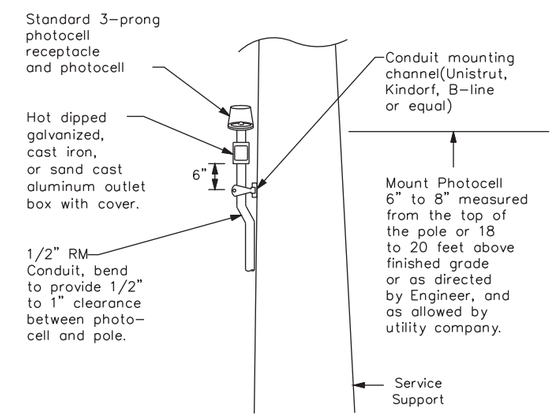

TOP MOUNTED PHOTOCELL

Install conduit strap maximum 3 feet from box. 5 foot maximum spacing between straps supporting conduit.

Texas Department of Transportation

Traffic Operations Division Standard

ELECTRICAL DETAILS SERVICE NOTES & DATA

ED(5)–14

FILE: ed5–14.dgn	DN: TxDOT	CK: TxDOT	DW: TxDOT	CK: TxDOT
©TxDOT October 2014	CONT	SECT	JOB	HIGHWAY
REVISIONS	0915	17	076	COMMON ST
	DIST		COUNTY	SHEET NO.
	SAT		COMAL	75 OF 97

71E

DATE: 2/8/2024
FILE: W:\00_TGC Project Files\NBR100\CAD\NBR100_GENERAL.dwg

DISCLAIMER:
The use of this standard is governed by the "Texas Engineering Practice Act". No warranty of any kind is made by TxDOT for any purpose whatsoever. TxDOT assumes no responsibility for the conversion of this standard to other formats or for incorrect results or damages resulting from its use.

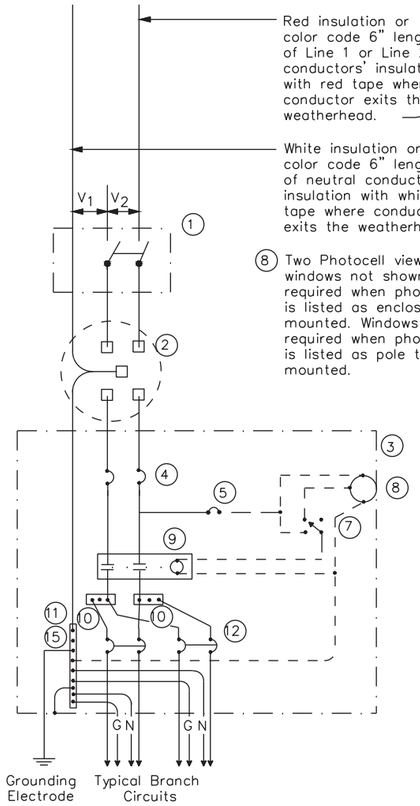

SCHEMATIC TYPE A
THREE WIRE

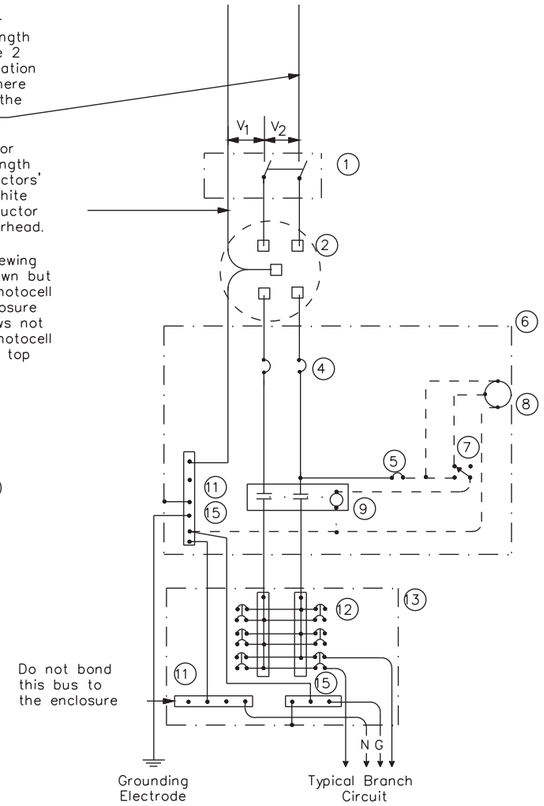

SCHEMATIC TYPE C
THREE WIRE

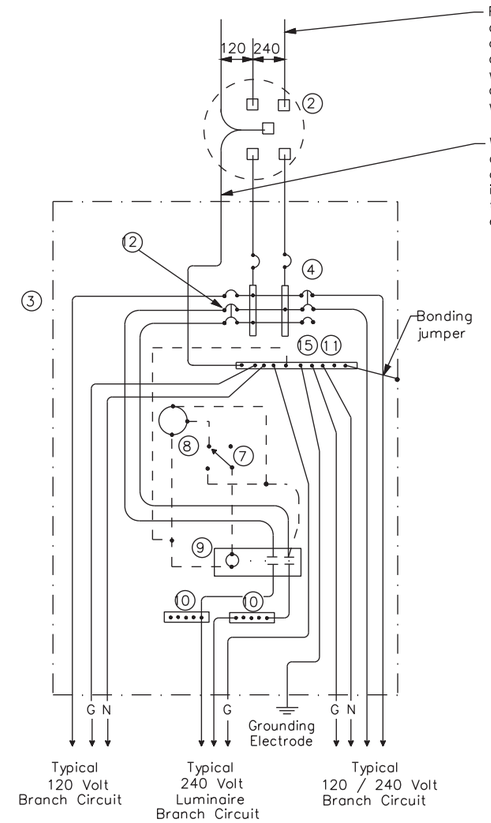

SCHEMATIC TYPE D – CUSTOM
120/240 VOLTS – THREE WIRE

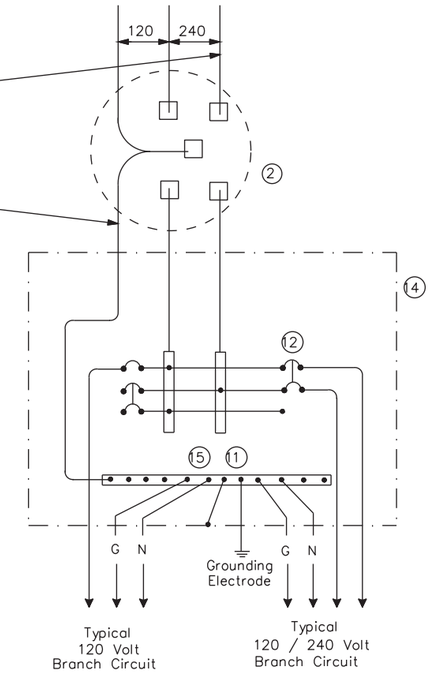

SCHEMATIC TYPE T
120/240 VOLTS – THREE WIRE

Galvanized steel–"Buy Off The Shelf" only. When required install photocell top of the pole or on luminaire only, no lighting contractor will be installed.

WIRING LEGEND	
————	Power Wiring
– – – –	Control Wiring
—N—	Neutral Conductor
—G—	Equipment grounding conductor–always required

SCHEMATIC LEGEND	
1	Safety Switch (when required)
2	Meter (when required–verify with electric utility provider)
3	Service Assembly Enclosure
4	Main Disconnect Breaker (See Electrical Service Data)
5	Circuit Breaker, 15 Amp (Control Circuit)
6	Auxiliary Enclosure
7	Control Station ("H–O–A" Switch)
8	Photo Electric Control (enclosure–mounted shown)
9	Lighting Contactor
10	Power Distribution Terminal Blocks
11	Neutral Bus
12	Branch Circuit Breaker (See Electrical Service Data)
13	Separate Circuit Breaker Panelboard
14	Load Center
15	Ground Bus

Texas Department of Transportation

Traffic Operations Division Standard

ELECTRICAL DETAILS SERVICE ENCLOSURE AND NOTES

ED(6)–14

FILE: ed6–14.dgn	DN: TxDOT	CK: TxDOT	DW: TxDOT	CK: TxDOT
©TxDOT October 2014	CONT	SECT	JOB	HIGHWAY
REVISIONS	0915	17	076	COMMON ST
	DIST	COUNTY		SHEET NO.
	SAT	COMAL		76 OF 97

71F

DATE: 2/8/2024
FILE: W:\00_TGC Project Files\NBR100\CAD\NBR100_GENERAL.dwg

TRAFFIC SIGNAL NOTES

1. Do not pass luminaire conductors through the signal controller cabinet.
2. Include an equipment grounding conductor in all conduits throughout the electrical system. Bond all exposed metal parts to the grounding conductor.
3. Provide roadway luminaires, when required, in accordance with the material and construction sections of Item 610, "Roadway Illumination Assemblies," except for performance testing of luminaires. Test installed roadway luminaires for proper operation as a part of the associated traffic signal system test.
4. If internally illuminated street name signs are approved for use, ground the fixture to the pole with a 12 AWG green XHHW conductor.
5. Bond anchor bolts to rebar cage in two locations using #3 bars or 6 AWG stranded copper conductors. Use listed mechanical connectors rated for embedment in concrete. See TXDOT standard TS-FD for further details.
6. Drill and tap signal poles for 1/2 in. X 13 UNC tank ground fitting. Provide and install tank ground fitting 4 in. to 6 in. directly below electrical service enclosure. Provide properly sized hole through the bottom of the enclosure for the service grounding electrode conductor. Connect the electrical service grounding electrode conductor to the tank ground fitting. Ensure electrical service grounding electrode conductor is as short and straight as possible from the enclosure to the tank ground fitting. See Inset A detail for further information. Size service entrance conduit and branch circuit conduit as shown in the plans.
7. Mount electrical service enclosure and meter to signal pole with stainless steel bands. Ensure bands are a minimum width of 3/4 in. Secure enclosures to bands using two-bolt brackets. Install brackets near top and bottom of each enclosure. Install properly sized stainless steel washers on each bolt in the enclosure. Band or drill and tap properly sized stand-off straps to signal pole for attaching conduit.
8. Conduct pull tests and insulation resistance tests on all illumination and power conductors as required in Item 620 "Electrical Conductors" and ED(3). To prevent electronics damage, do not conduct insulation resistance tests on traffic signal cables after termination.
9. Lock all enclosures and bolt down all ground box covers before applying power to the signal installation.
10. Terminate conduits entering the top of enclosures with a conduit-sealing hub or threaded boss such as meter hub. Install a grounding bushing on all metal conduits not connected to conduit-sealing hub or threaded boss. Bond the grounding bushing to the ground bus with a bonding jumper. Seal all conduits entering enclosures with duct seal or expanding foam. Do not use silicone to seal conduit ends.
11. For all conduits, ensure the burial depth is a minimum of 18". Ensure the minimum burial depth for conduit placed under a roadway is 24".

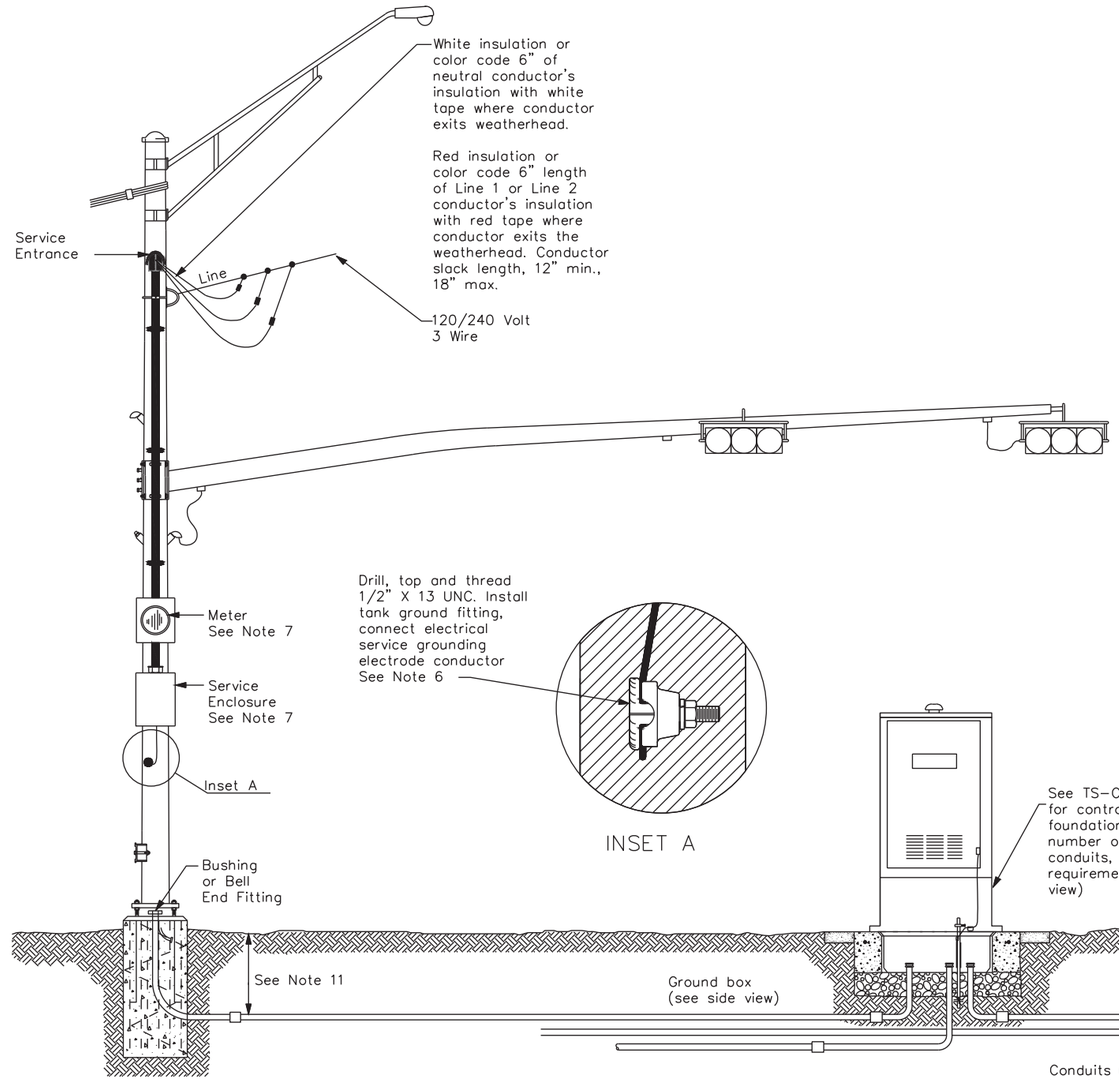

SIGNAL POLE WITH SERVICE

Type T electrical service mounted on signal pole shown as an example. See electrical details, layout sheets, and electrical service data chart for additional details.

INSET A

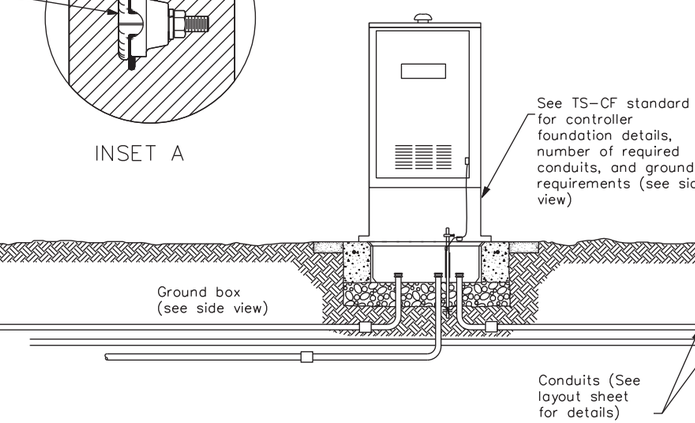

SIGNAL CONTROLLER FRONT VIEW

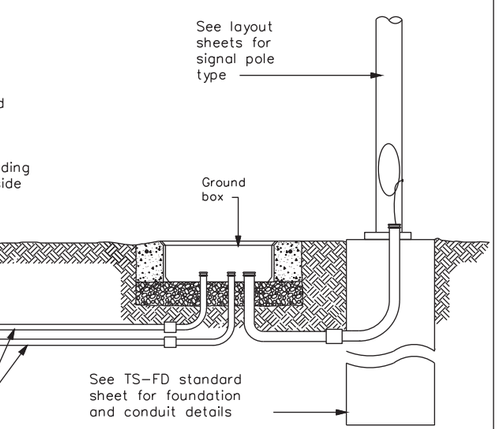

SIGNAL POLE

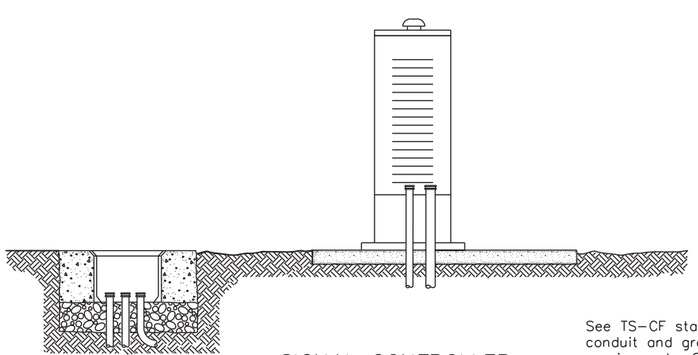

SIGNAL CONTROLLER SIDE VIEW

See TS-CF standard for conduit and grounding requirements. See layout sheets for ground box locations and any additional conduits that are required.

Texas Department of Transportation — Traffic Operations Division Standard

ELECTRICAL DETAILS TYPICAL TRAFFIC SIGNAL SYSTEM DETAILS

ED(8)-14

FILE: ed8-14.dgn	DN: TxDOT	CK: TxDOT	DW: TxDOT	CK: TxDOT
©TxDOT October 2014	CONT	SECT	JOB	HIGHWAY
REVISIONS	0915	17	076	COMMON ST
	DIST		COUNTY	SHEET NO.
	SAT		COMAL	77 OF 97

71H

DISCLAIMER: The use of this standard is governed by the "Texas Engineering Practice Act". No warranty of any kind is made by TxDOT for any purpose whatsoever. TxDOT assumes no responsibility for the conversion of this standard to other formats or for incorrect results or damages resulting from its use.

DATE: 2/8/2024
FILE: W:\00_TGC Project Files\NBR100\CAD\NBR100_GENERAL.dwg

PEDESTAL SERVICE NOTES

1. Manufacture pedestal electrical services in accordance with Departmental Material Specifications (DMS)11080 "Electrical Services", 11085 "Electrical Services–Pedestal (PS)" and Item 628 "Electrical Services. "Provide pedestal electrical services as listed on the Material Producers list (MPL) on the Department's web site under "Roadway Illumination and Electrical Supplies," Item 628. Ensure all mounting hardware and installation details of services meet utility company specifications. Contact the local utility company for approval of pedestal details prior to installing the electrical pedestal service. Submit any changes required by the utility company prior to manufacturing the pedestal enclosure.

2. When a meter socket is required, provide a socket with a minimum 100 amp rating that complies with local utility requirements.

3. Provide Class A or C concrete for pedestal service foundations in accordance with Item 420, "Concrete Substructures," except that concrete will not be paid for directly but is considered subsidiary to Item 628.

4. Provide #4 reinforcing steel for foundations in accordance with Item 440, "Reinforcement for Concrete."

5. Install 1/2 in. X 2 1/16 in. minimum length concrete single expansion type anchors for mounting pedestal enclosure to foundation. Anchor location to match mounting holes in each corner of enclosure. Secure each of the four corners of the pedestal enclosure to the anchors in the foundation with a 1/2 in. galvanized or stainless steel machine thread bolt, a properly sized locknut and a flat washer.

6. Finish top of concrete foundation in a neat and workmanlike manner. If leveling washers are used, ensure no more than 1/8 in. gap at any corner. Do not exceed a maximum dip or rise in the foundation of 1/8 in. per foot. When properly installed, ensure the top of the service enclosure is level front to back and side to side within 1/4 in. Repair rocking or movement of the service enclosure at no additional cost to the department.

7. Do not use liquidtight flexible metal conduit (LFMC) on pedestal type services.

8. Ensure all elbows in the foundation are sized as per utility provider's conduit requirements for underground conduit and feeders. PVC extensions may be installed provided the ends of the rigid metal conduits are more than 2 in. below the top of the concrete foundation. Where extension conduits are metal, grounding bushings must be installed with a bonding jumper properly terminated.

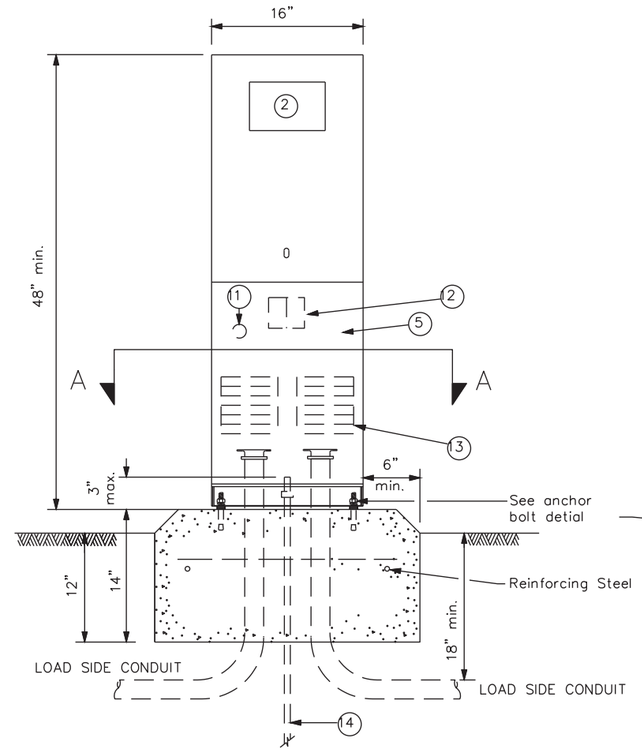

FRONT VIEW

TYPE C shown, TYPE A similar except that TYPE A shall have individual circuit breakers (CB) mounted on an equipment mounting panel. CB Handles shall protrude through hinged deadfront trim.

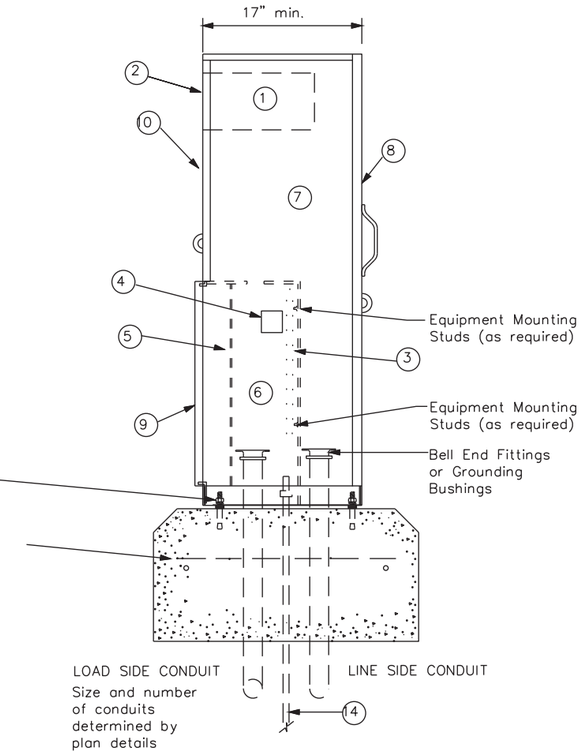

SIDE VIEW

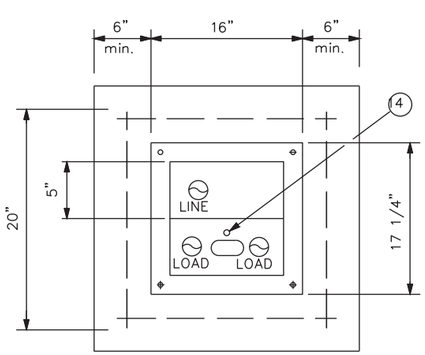

SECTION A–A

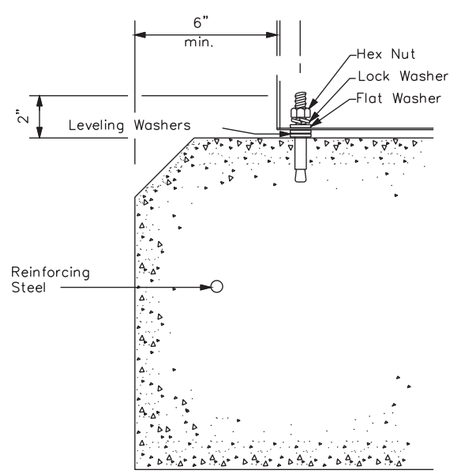

ANCHOR BOLT DETAIL

LEGEND	
1	Meter Socket, (when required)
2	Meter Socket Window, (when required)
3	Equipment Mounting Panel
4	Photo Electric Control Window, (When required)
5	Hinged Deadfront Trim
6	Load Side Conduit Trim
7	Line Side Conduit Area
8	Utility Access Door, with handle
9	Pedestal Door
10	Hinged Meter Access
11	Control Station (H–O–A Switch)
12	Main Disconnect
13	Branch Circuit Breakers
14	Copper Clad Ground Rod – 5/8" X 10'

Texas Department of Transportation — Traffic Operations Division Standard

ELECTRICAL DETAILS
ELECTRICAL SERVICE SUPPORT
PEDESTAL SERVICE TYPE PS

ED(9)–14

FILE: ed9–14.dgn	DN: TxDOT	CK: TxDOT	DW: TxDOT	CK: TxDOT
©TxDOT October 2014	CONT	SECT	JOB	HIGHWAY
REVISIONS	0915	17	076	COMMON ST
	DIST		COUNTY	SHEET NO.
	SAT		COMAL	78 OF 97

71J

DISCLAIMER: The use of this standard is governed by the "Texas Engineering Practice Act". No warranty of any kind is made by TxDOT for any purpose whatsoever. TxDOT assumes no responsibility for the conversion of this standard to other formats or for incorrect results or damages resulting from its use.

DATE: 2/8/2024
FILE: W:\00_TGC Project Files\NBR100\CAD\NBR100_GENERAL.dwg

DISCLAIMER: The use of this standard is governed by the "Texas Engineering Practice Act". No warranty of any kind is made by TxDOT for any purpose whatsoever. TxDOT assumes no responsibility for the conversion of this standard to other formats or for incorrect results or damages resulting from its use.

MATERIALS	
Pole or Arm Simplex	ASTM A27 Gr.65–35 or A148 Gr.80–50, A576 Gr.1021 ③, or A36 (Arm only)
Arm Pipes	ASTM A53 Gr.B, A501, A1008 HSLAS–F Gr.50 ④, or A1011 HSLAS–F Gr.50 ④
Arm Strut Plates ②	ASTM A36, A572 Gr.50 ④, or A588
Misc.	ASTM designations as noted

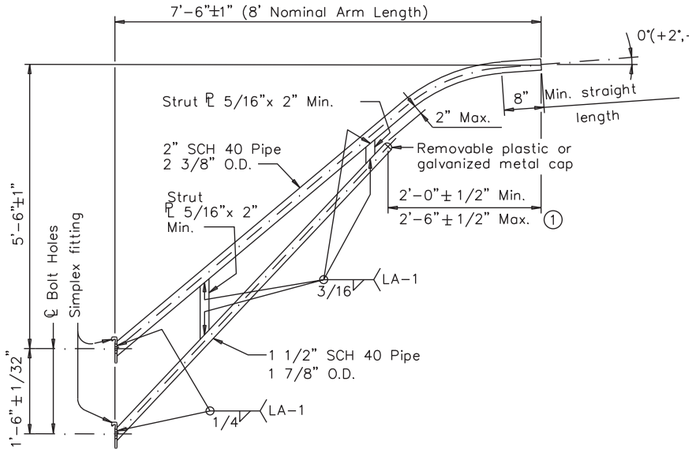

8–FOOT LUMINAIRE ARM

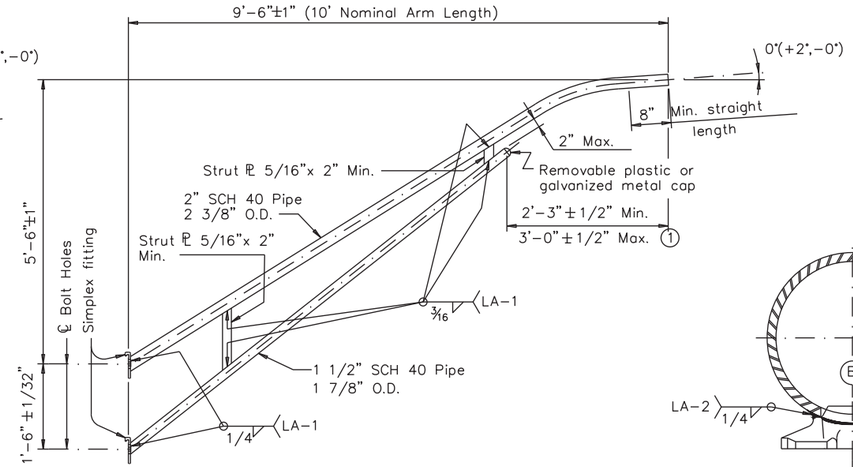

10–FOOT LUMINAIRE ARM

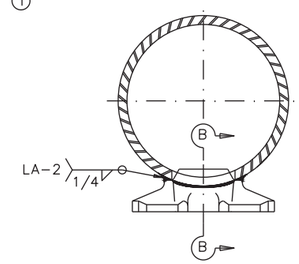

DIRECT ATTACHMENT DETAIL

① Dimensional limits are given to show acceptable variation in design. All of a Fabricator's production of a particular arm length shall have the same dimensions within specified tolerances.

② Any of the materials listed for plates may be used where the drawings do not specify a particular ASTM designation.

③ A576 must be suitable for forging and also meet minimum tensile strength of 65 ksi, minimum yield of 35 ksi, and elongation in 2 inches of 22 percent.

④ ASTM A572, A1008 HSLAS–F, and A1011 HSLAS–F may have higher yield strengths but shall not have less elongation than the grade indicated.

GENERAL NOTES:

Design conforms to 1994 AASHTO Standard Specifications for Structural Supports for Highway Signs, Luminaires, and Traffic Signals and Interim Revisions thereto. Design Wind Speed equals 90 mph plus a 1.3 gust factor. Arms are designed to support a 60 lb. luminaire having an effective projected area (actual area times drag coefficient) of 1.6 sq. ft.

Materials and fabrication shall be in accordance with Item 686, "Traffic Signal Pole Assemblies (Steel)" and with the details, dimensions, and weld procedures shown herein. Weld references call for preapproved weld procedures which the Fabricator must obtain prior to fabrication. In the absense of specified Fabricaton tolerances, dimensions shall be within the tolerances generally obtainable in normal fabrication practice.

Unless otherwise noted, all parts shall be galvanized after fabrication in accordance with Item 445, "Galvanizing".

Deviation from the details and dimensions shown herein require submission of shop drawings in accordance with Item 441, "Steel Structures". Alternate designs are not acceptable.

Each pole simplex fitting shall be supplied with 2 ASTM A325 bolts and 2 lock washers of the size specified. The bolts and lock washers shall be secured to the pole with the other hardware items called for in the plans. When clamp attachment is specified, the Fabricator shall ship the clamp assembly securely attached to the pole at the location shown on the plans.

If clamp assemblies are ordered without poles, the Fabricator shall ship one upper and one lower clamp assembly together in a single package, including all nuts and washers required for the clamps and simplex fittings.

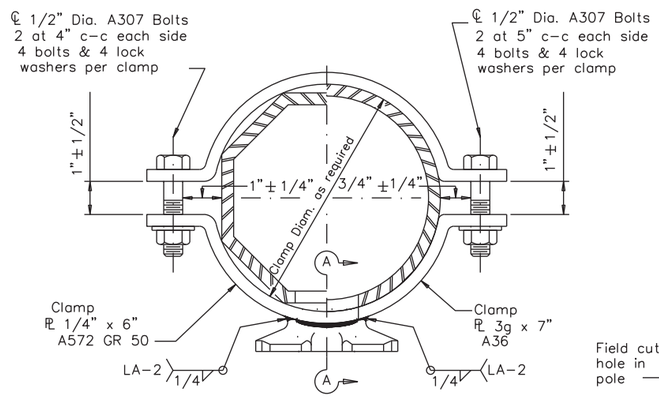

CLAMP ATTACHMENT DETAIL NO.1
(HALF SECTION)

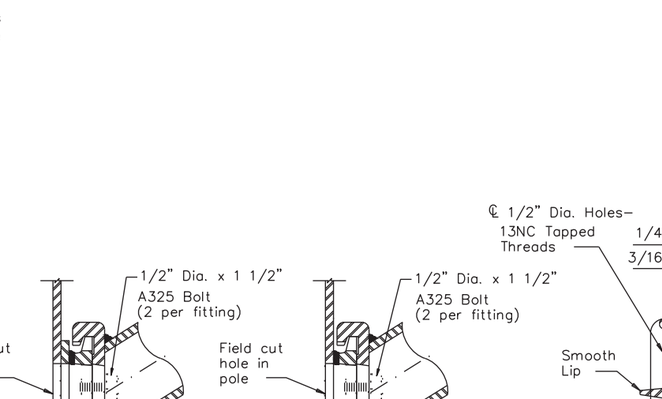

CLAMP ATTACHMENT DETAIL NO.2
(HALF SECTION)

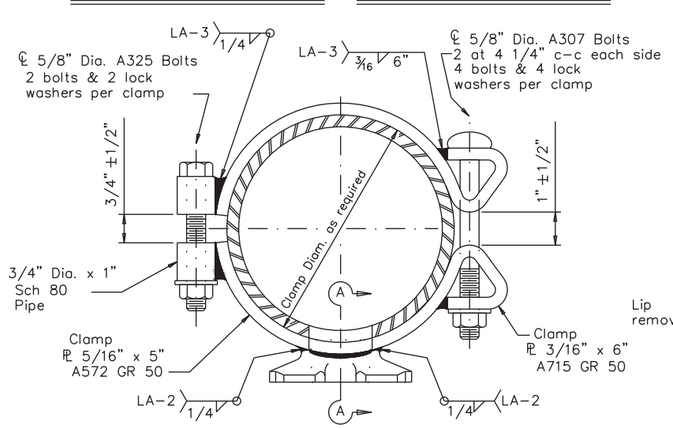

CLAMP ATTACHMENT DETAIL NO.3
(HALF SECTION)

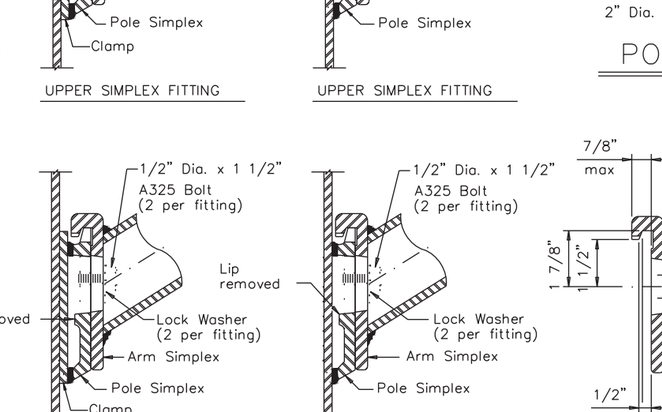

CLAMP ATTACHMENT DETAIL NO.4
(HALF SECTION)

UPPER SIMPLEX FITTING

UPPER SIMPLEX FITTING

LOWER SIMPLEX FITTING

LOWER SIMPLEX FITTING

SECTON A–A

SECTON B–B

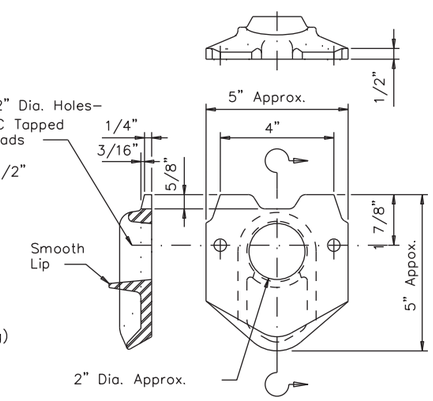

POLE SIMPLEX DETAIL

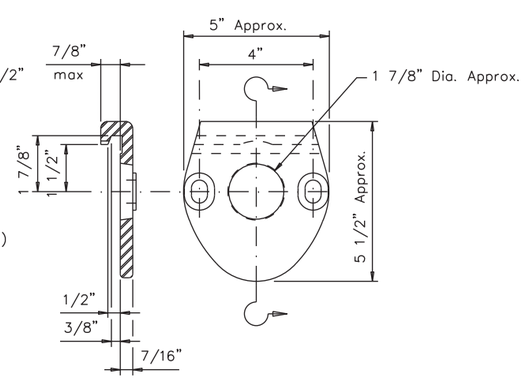

ARM SIMPLEX DETAIL

Texas Department of Transportation
Traffic Operations Division

STANDARD ASSEMBLY DRAWINGS FOR LUMINAIRE SUPPORT STRUCTURES

ARM DETAILS

LUM–A–12

©TxDOT August 1995

DN: LEH	CK: JSY	DW: LTT	CK: TEB

REVISIONS
5–96
1–99
1–12

CONT	SECT	JOB	HIGHWAY
0915	17	076	COMMON ST
DIST		COUNTY	SHEET NO.
SAT		COMAL	79 OF 97

DATE: 2/8/2024
FILE: W:\00_TGC Project Files\NBR100\CAD\NBR100_GENERAL.dwg

ARM SIZE D_1 in.	‡ in.	A in.	B in.	C in.	D in.	E in.	CONN BOLT DIA in.
6.5	.179	12	9	9	6	1 3/4	1
7.5	.179	13	9	10	6	1 3/4	1
8.0	.179	14	10	11	7	2	1 1/4
9.0	.179	16	11	13	8	2	1 1/4
9.5	.179	17	12	14	9	2	1 1/4
9.5	.239	18	12	15	9	2	1 1/4
10.0	.239	18	12	15	9	2	1 1/4
10.5	.239	18	13	15	10	3	1 1/2
11.0	.239	18	13	15	10	3	1 1/2

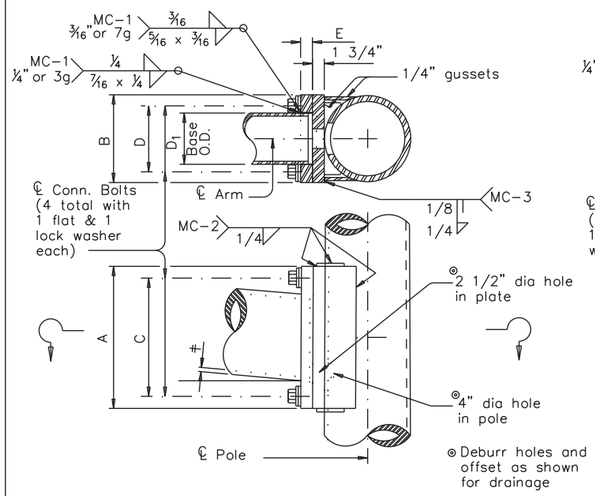

FIXED MOUNT DETAIL 1

ARM SIZE D_1 in.	‡ in.	A in.	F in.	CONN. BOLTS No. ea.	CONN. BOLTS Dia in.	PIN BOLTS No. ea.	PIN BOLTS Dia in.
6.5	.179	12	6	4	1	2	5/8
7.5	.179	14	8	4	1	2	5/8
8.0	.179	14	8	4	1	2	5/8
9.0	.179	16	10	4	1	2	5/8
9.5	.179	18	12	4	1 1/4	3	5/8
9.5	.239	18	12	4	1 1/4	3	5/8
10.0	.239	18	12	4	1 1/4	3	5/8

ARM SIZE D_1 in.	‡ in.	A in.	B	C	D in.	E in.	CONN BOLT DIA in.
7.0	.179	11	11	8	8	1 3/4	1 1/4
7.5	.179	11	11	8	8	1 3/4	1 1/4
8.0	.179	11	11	8	8	2	1 1/4
9.0	.179	13	13	10	10	2	1 1/4
10.0	.179	13	13	10	10	2	1 1/4
9.5	.239	13	13	10	10	2	1 1/4
10.0	.239	14	14	11	11	2	1 1/2
11.0	.239	14	14	11	11	3	1 1/2
11.5	.239	14	14	11	11	3	1 1/2

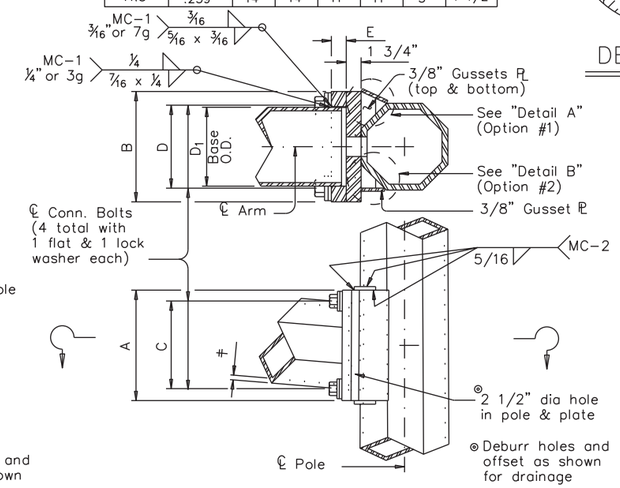

FIXED MOUNT DETAIL 2

ARM SIZE D_1 in.	‡ in.	A in.	F in.	T in.	CONN. BOLTS No. ea.	CONN. BOLTS Dia in.	PIN BOLTS No. ea.	PIN BOLTS Dia in.
7.0	.179	12	6	3/4	4	3/4	2	5/8
7.5	.179	14	8	3/4	4	3/4	2	5/8
8.0	.179	14	8	3/4	4	3/4	2	5/8
9.0	.179	16	10	7/8	4	1	2	5/8
10.0	.179	18	10	7/8	4	1	2	5/8
9.5	.239	18	10	1	6	1	3	5/8
10.0	.239	18	10	1	6	1	3	5/8

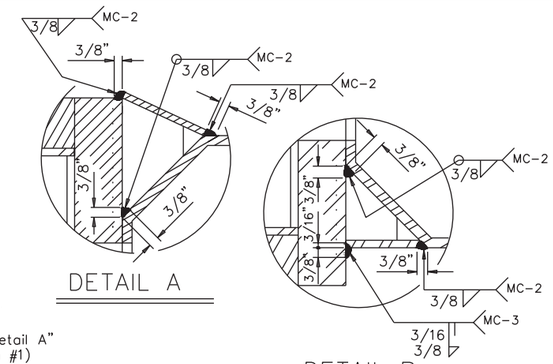

DETAIL A

DETAIL B

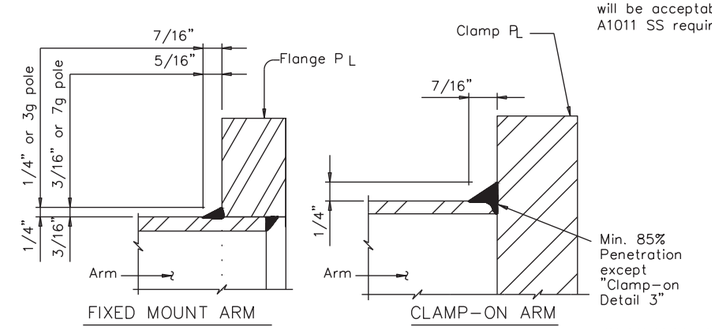

FIXED MOUNT ARM

CLAMP-ON ARM

ARM BASE WELD DETAILS

ARM SIZE D_1 in.	‡ in.	A in.	F in.	CONN. BOLTS No. ea.	CONN. BOLTS Dia in.	PIN BOLTS No. ea.	PIN BOLTS Dia in.
6.5	.179	12	6	4	1	2	5/8
7.5	.179	14	8	4	1	2	5/8
8.0	.179	14	8	4	1	2	5/8
9.0	.179	16	10	4	1	2	5/8
9.5	.179	18	12	6	1	3	5/8
9.5	.239	18	12	6	1	3	5/8
10.0	.239	18	12	6	1	3	5/8

MATERIALS	
Round Shafts or Polygonal Shafts (1)	ASTM A595 Gr.A, A588, A1008 HSLAS Gr.50 Class 2, A1011 HSLAS Gr.50 Class 2, A572 Gr.50 or A1011 SS Gr.50 (2)
Plates (1)	ASTM A36, A588, or A572 Gr.50
Connection Bolts	ASTM A325 or A449, except where noted
Pin Bolts	ASTM A325
Pipe (1)	ASTM A53 Gr.B, A501, A1008 HSLAS-F Gr.50, A1011 HSLAS-F Gr.50
Misc. Hardware	Galvanized steel or stainless steel or as noted

(1) ASTM A572, A1008 HSLAS, A1011 HSLAS, A1008 HSLAS-F, A1011 HSLAS-F or A1011 SS may have higher yield strengths but shall not have less elongation than the grade indicated.

(2) ASTM A1011 SS Gr.50 material shall also have a minimum elongation of 18 percent in 8 inches or 23 percent in 2 inches. Material thickness in excess of those stipulated under A1011 SS will be acceptable providing the material meets all other A1011 SS requirements and the requirements of this item.

GENERAL NOTES:

Clamp-on details are used for the second arm on dual mast arm assemblies. A Maximum 1 1/2" wide vertical slotted hole shall be cut in the front clamp plate to facilitate drainage during galvanizing. The slot shall be centered behind the arm and shall be no longer than the arm diameter minus 1"

Fixed mount details are used for single mast arm assemblies and for the first arm on dual mast arm assemblies.

Where duplicate parts occur on a detail, welds shown for one part shall apply to all similar parts on the detail.

Pin bolts are required to prevent rotation of clamp-on arms under design wind forces.

NOTE:

Pin bolts shall be A325 with threads excluded from the shear plane. Pin bolt and 3/4" dia pipe shall have 3/16" dia holes for a 1/8" dia galvanized cotter pin. Back clamp plate shall be furnished with a 3/4" dia hole for each pin bolt. An 11/16" dia hole for each pin bolt shall be field drilled through the pole after arm orientations have been approved by the Engineer.

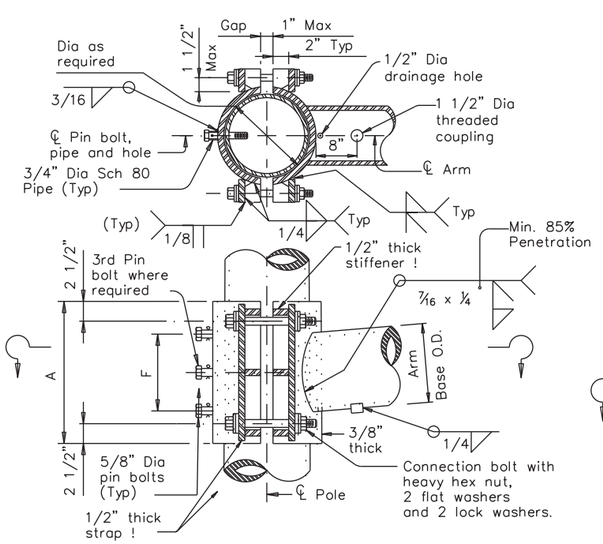

CLAMP-ON DETAIL 1

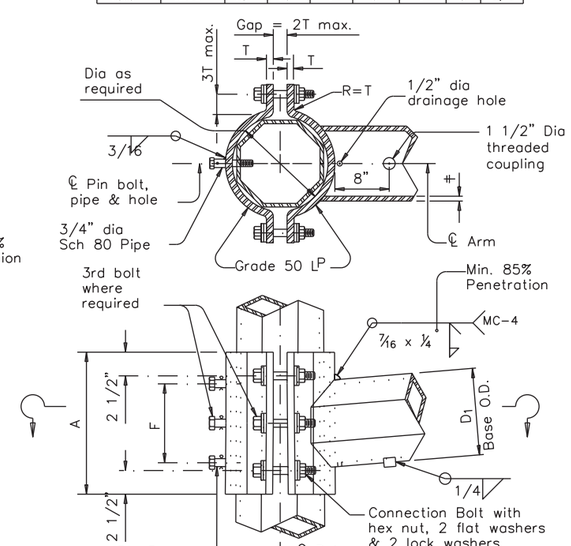

CLAMP-ON DETAIL 2

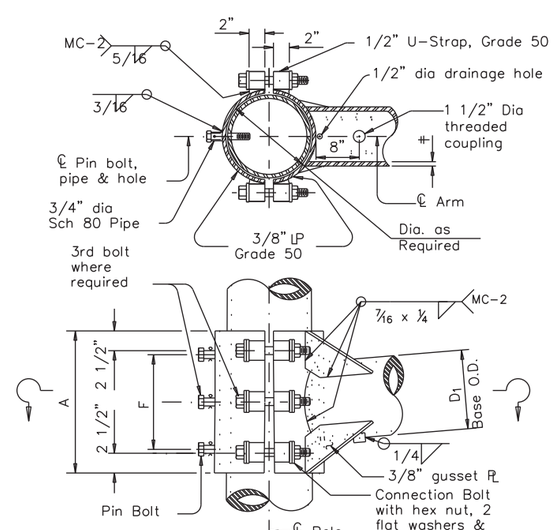

CLAMP-ON DETAIL 3

Texas Department of Transportation
Traffic Operations Division

STANDARD ASSEMBLY FOR TRAFFIC SIGNAL SUPPORT STRUCTURES

MAST ARM CONNECTIONS

MA-C-12

©TxDOT August 1995

DN: MS	CK: JSY	DW: MMF	CK: JSY
CONT	SECT	JOB	HIGHWAY
0915	17	076	COMMON ST
DIST		COUNTY	SHEET NO.
SAT		COMAL	80 OF 97

REVISIONS
5-96
5-09
1-12

126A

DISCLAIMER: The use of this standard is governed by the "Texas Engineering Practice Act". No warranty of any kind is made by TxDOT for any purpose whatsoever. TxDOT assumes no responsibility for the conversion of this standard to other formats or for incorrect results or damages resulting from its use.

DATE: 2/8/2024
FILE: W:\00_TGC Project Files\NBR100\CAD\NBR100_GENERAL.dwg

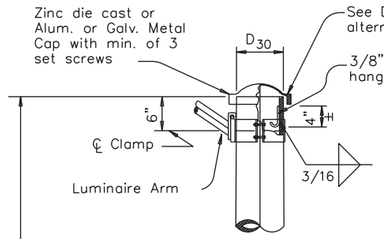

DETAIL A

(for pole with luminaire)

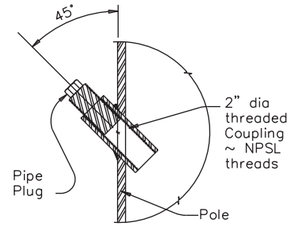

POLE COUPLING DETAIL

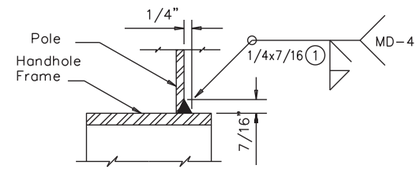

DETAIL G

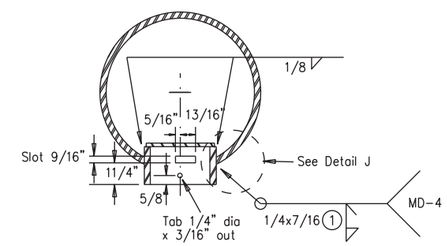

SECTION X-X

Opening for access compartment shall be no more than 1/16inch wider than the access compartment itself.

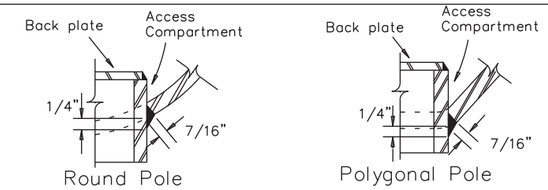

DETAIL J

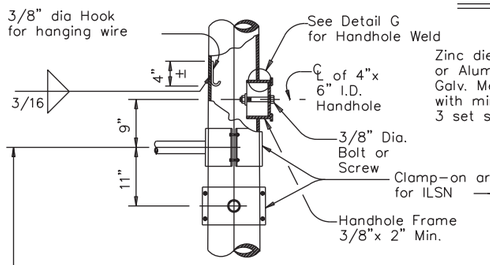

DETAIL B

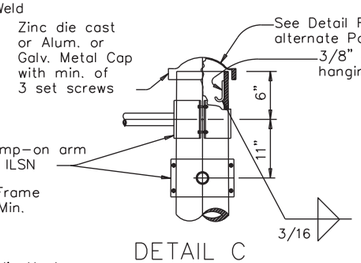

DETAIL C

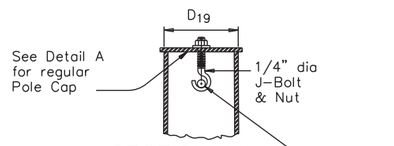

SECTION Y-Y

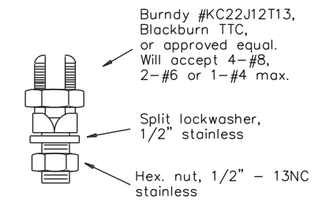

COPPER GROUND CONNECTOR

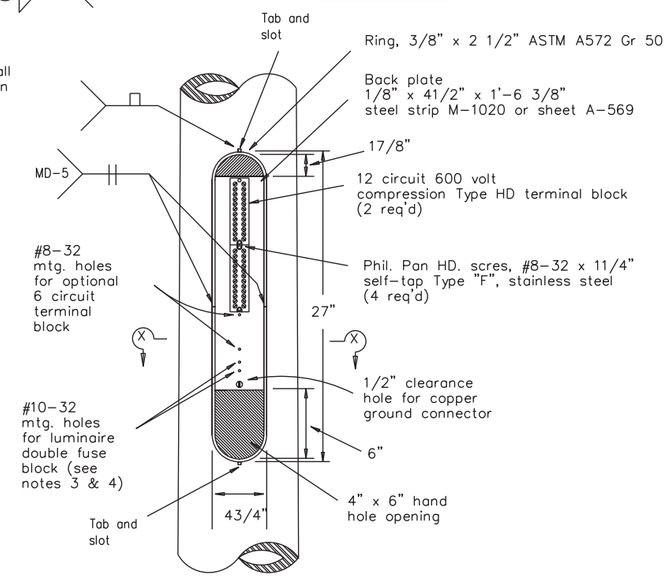

ACCESS COMPARTMENT

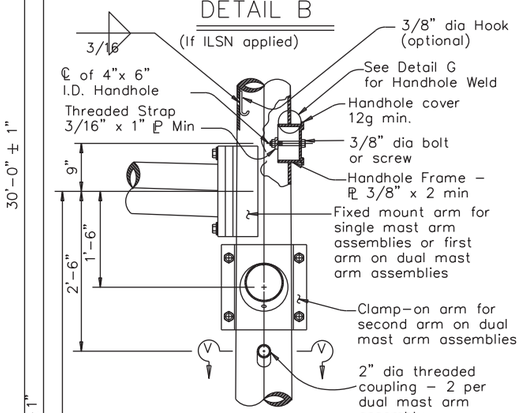

DETAIL D

(for 30' pole with luminaire and ILSN sign)

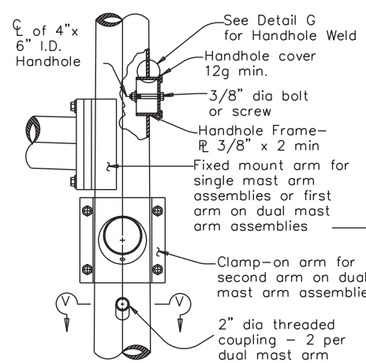

DETAIL E

(for 24' pole with ILSN sign and no luminaire)

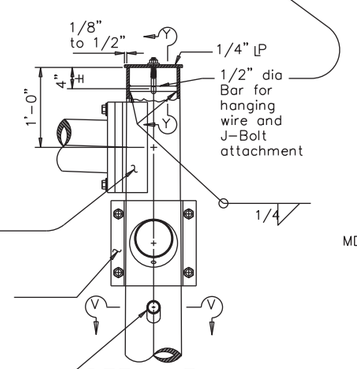

DETAIL F

(for 19' pole with no ILSN sign and no luminaire)

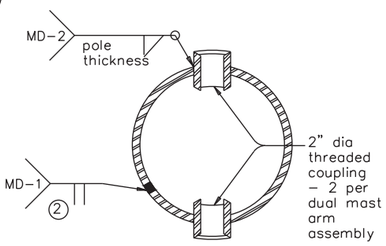

SECTION V-V

NOTES:

1. The cover shall be one piece formed from ABS plastic, shall be a pearl gray color, and shall be suitable for exposure to harsh sunlight and extreme weather. Cover shall latch with two screw latches and shall fit tightly to the enclosure ring to create a rainproof seal. Latch screws shall be 1/4-20 stainless flat socket head screws with tamper proof feature.

2. The pole manufacturer shall provide with each pole a separate kit consisting of: one cover with two latching assemblies, two terminal strips (Marathon #985GP12CU or approved equal), four #8-32 x 1 1/4" self tapping type "F" stainless steel pan head screws, and one ground connector (Blackburn TTC, Burndy KC22J12T13, or Ilsco SSS-5). The traffic signal contractor shall install the kit items in the field.

3. The screw hole spacing on the enclosure back plate shall be for two Marathon #985GP12 terminal strips, one Marathon #985GP06CU terminal strip, and one Bussmann #BM6032B fuse block.

4. Install one Bussmann #BM6032B, Littelfuse #L60030M-2C, or Ferraz-Shawmut #30352 fuse block for poles where luminaires are to be installed.

Anchor Bolt Diameter	Bolt Hole Diameter	Slot Length	Bolt Circle Diameter	Base PL Dim. L x T	Adjust. Range
1 1/2"	1 3/4"	3 1/2"	17"	18" x 1 1/2"	13.4°
1 3/4"	2"	4"	19"	20" x 1 3/4"	13.5°
2"	2 1/4"	4 1/2"	21"	22" x 2"	13.6°
2 1/4"	2 1/2"	5"	23"	24" x 2 1/4"	13.7°

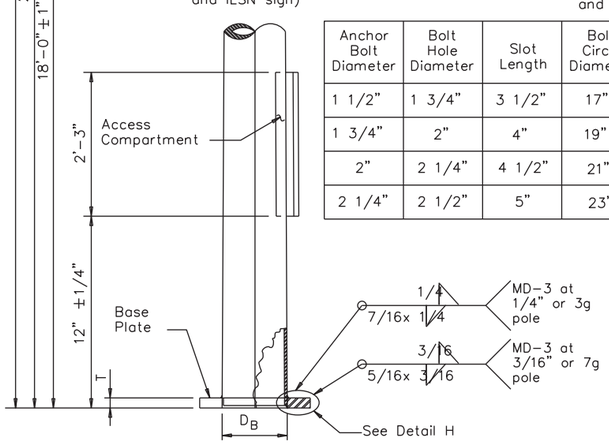

POLE ELEVATION

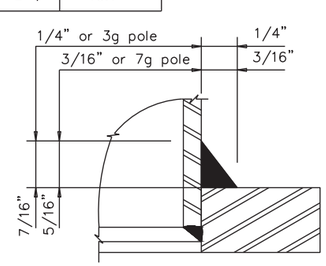

DETAIL H

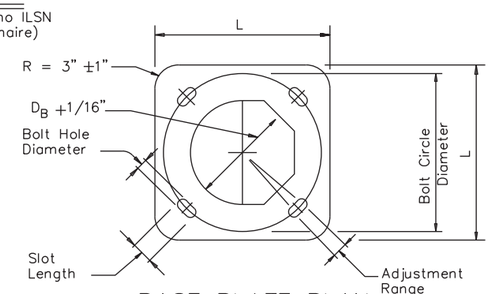

BASE PLATE PLAN

(1) 85% Min. penetration

(2) 60% Min. penetration 100% pemetration within 6" of circumferential base welds.

Texas Department of Transportation
Traffic Operations Division

TRAFFIC SIGNAL SUPPORT STRUCTURES MAST ARM POLE DETAILS

MA-D-12

©TxDOT August 1995

DN: MS	CK: JSY	DW: FDN	CK: CAL
REVISIONS 8-99 1-12			

CONT	SECT	JOB	HIGHWAY
0915	17	076	COMMON ST
DIST		COUNTY	SHEET NO.
SAT		COMAL	81 OF 97

DISCLAIMER: The use of this standard is governed by the "Texas Engineering Practice Act". No warranty of any kind is made by TxDOT for any purpose whatsoever. TxDOT assumes no responsibility for the conversion of this standard to other formats or for incorrect results or damages resulting from its use.

DATE: 2/8/2024
FILE: W:\00_TGC Project Files\NBR100\CAD\NBR100_GENERAL.dwg

Arm Length	ROUND POLES					POLYGONAL POLES					Foundation Type
	D_B	D_{19}	D_{24}	D_{30}	(1) thk	D_B	D_{19}	D_{24}	D_{30}	(1) thk	
ft.	in.	in.	in.	in.	in.	in.	in.	in.	in.	in.	
20	10.5	7.8	7.1	6.3	.179	11.5	8.5	7.7	6.8	.179	30-A
24	11.0	8.3	7.6	6.8	.179	12.0	9.0	8.2	7.3	.179	30-A
28	11.5	8.8	8.1	7.3	.179	12.5	9.5	8.7	7.8	.179	30-A
32	12.5	9.8	9.1	8.3	.179	12.0	9.0	8.2	7.3	.239	30-A
36	12.0	9.3	8.6	7.8	.239	12.5	9.5	8.7	7.8	.239	36-A
40	12.0	9.3	8.6	7.8	.239	13.5	10.5	9.7	8.8	.239	36-A
44	12.5	9.8	9.1	8.3	.239	14.0	11.0	10.2	9.3	.239	36-A
48	13.0	10.3	9.6	8.8	.239	15.0	12.0	11.2	10.3	.239	36-A

Arm Length	ROUND ARMS					POLYGONAL ARMS				
	L_1	D_1	D_2	(1) thk	Rise	L_1	D_1	(2) D_2	(1) thk	Rise
ft.	ft.	in.	in.	in.		ft.	in.	in.	in.	
20	19.1	6.5	3.8	.179	1'-9"	19.1	7.0	3.5	.179	1'-8"
24	23.1	7.5	4.3	.179	1'-10"	23.1	7.5	3.5	.179	1'-9"
28	27.1	8.0	4.2	.179	1'-11"	27.1	8.0	3.5	.179	1'-10"
32	31.0	9.0	4.7	.179	2'-1"	31.0	9.0	3.5	.179	2'-0"
36	35.0	9.5	4.6	.179	2'-4"	35.0	10.0	3.5	.179	2'-1"
40	39.0	9.5	4.1	.239	2'-8"	39.0	9.5	3.5	.239	2'-3"
44	43.0	10.0	4.1	.239	2'-11"	43.0	10.0	3.5	.239	2'-6"
48	47.0	10.5	4.1	.239	3'-4"	47.0	11.0	3.5	.239	2'-9"

D_B = Pole Base O.D.
D_{19} = Pole Top O.D. with no Luminaire and no ILSN
D_{24} = Pole Top O.D. with ILSN w/out Luminaire
D_{30} = Pole Top O.D. with Luminaire
D_1 = Arm Base O.D.
D_2 = Arm End O.D.
L_1 = Shaft Length
L = Nominal Arm Length

(1) Thickness shown are minimums, thicker materials may be used.

(2) D_2 may be increased by up to 1" for polygonal arms.

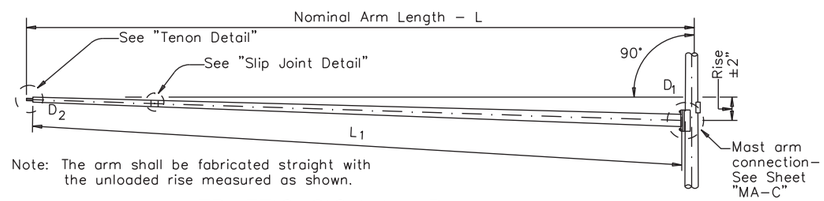

Note: The arm shall be fabricated straight with the unloaded rise measured as shown.

TRAFFIC SIGNAL ARM

(Fixed Mount)

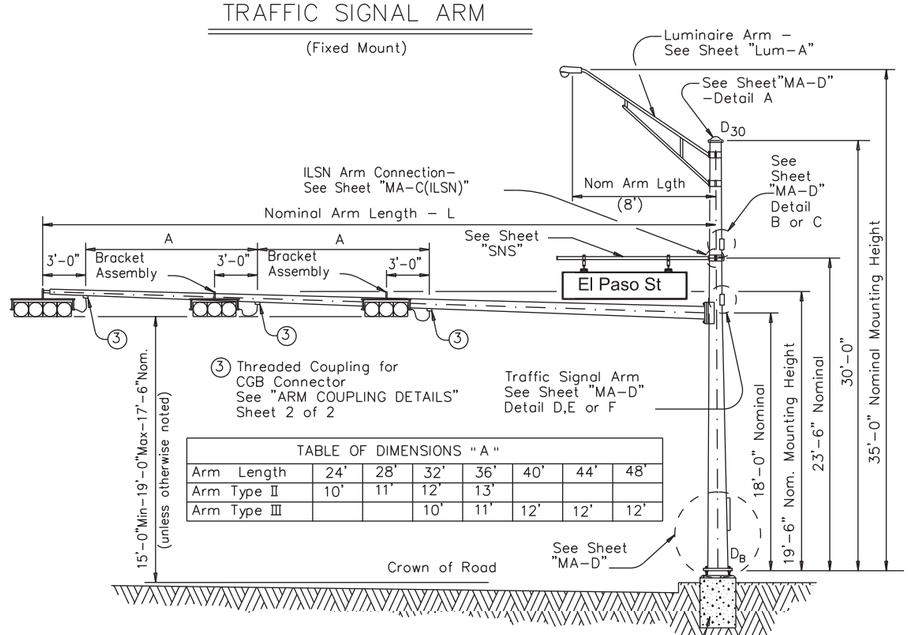

TABLE OF DIMENSIONS "A"							
Arm Length	24'	28'	32'	36'	40'	44'	48'
Arm Type II	10'	11'	12'	13'			
Arm Type III			10'	11'	12'	12'	12'

STRUCTURE ASSEMBLY

SHIPPING PARTS LIST

Ship each pole with the following attached: enlarged hand hole, pole cap, fixed-arm connection bolts and washers and any additional hardware listed in the table.

Nominal Arm Length	30' Poles With Luminaire		24' Poles With ILSN		19' Poles With No Luminaire and No ILSN	
	Above hardware plus: One (or two if ILSN attached) small hand hole, clamp-on simplex		Above hardware plus one small hand hole		See note above	
ft	Designation	Quantity	Designation	Quantity	Designation	Quantity
20	20L-80		20S-80		20-80	
24	24L-80		24S-80	3	24-80	
28	28L-80		28S-80		28-80	
32	32L-80		32S-80	1	32-80	
36	36L-80		36S-80		36-80	
40	40L-80		40S-80		40-80	
44	44L-80		44S-80		44-80	
48	48L-80		48S-80		48-80	

Traffic Signal Arms (1 per Pole) Ship each arm with the listed equipment attached

Nominal Arm Length	Type I Arm (1 Signal)		Type II Arm (2 Signals)		Type III Arm (3 Signals)	
	1 CGB connector		1 Bracket Assembly and 2 CGB Connectors		2 Bracket Assemblies and 3 CGB Connectors	
ft	Designation	Quantity	Designation	Quantity	Designation	Quantity
20	20I-80					
24	24I-80		24II-80	3		
28	28I-80		28II-80			
32			32II-80	1	32III-80	
36			36II-80		36III-80	
40					40III-80	
44					44III-80	
48					48III-80	

Luminaire Arms (1 per 30' pole)

Nominal Arm Length	Quantity
8' Arm	4

ILSN Arm (Max. 2 per pole) Ship with clamps, bolts and washers

Nominal Arm Length	Quantity
7' Arm	
9' Arm	

Anchor Bolt Assemblies (1 per pole)

Anchor Bolt Diameter	Anchor Bolt Length	Quantity
1 1/2"	3'-4"	4
1 3/4"	3'-10"	

Each anchor bolt assembly consists of the following: Top and Bottom templates, 4 anchor bolts, 8 nuts, 8 flat washers, and 4 nut anchor devices (Type 2) per Standard Drawing "TS-FD".

Templates may be removed for shipment.

SHEET 1 OF 2

Texas Department of Transportation
Traffic Operations Division

TRAFFIC SIGNAL SUPPORT STRUCTURES

SINGLE MAST ARM ASSEMBLY (80 MPH WIND ZONE)

SMA-80(1)-12(MOD)

STATE OF TEXAS ROBERT J. SUTEKUNIS 129477 LICENSED PROFESSIONAL ENGINEER
02/13/2024

©TxDOT August 1995

DN: MS	CK: JSY	DW: MMF	CK: JSY
REVISIONS 5-96 11-99 1-12	CONT	SECT	JOB	HIGHWAY
		17	076	COMMON ST
	DIST	COUNTY	SHEET NO.
	SAT	COMAL	82 OF 97

122A

DISCLAIMER: The use of this standard is governed by the "Texas Engineering Practice Act". No warranty of any kind is made by TxDOT for any purpose whatsoever. TxDOT assumes no responsibility for the conversion of this standard to other formats or for incorrect results or damages resulting from its use.

DATE: 2/8/2024
FILE: W:\00_TGC Project Files\NBR100\CAD\NBR100_GENERAL.dwg

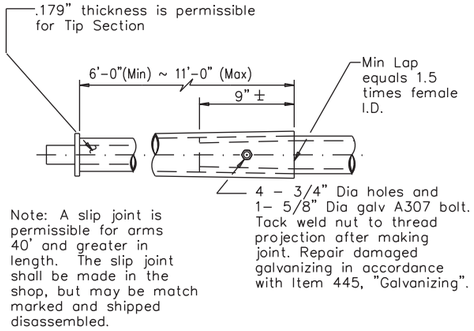

SLIP JOINT DETAIL

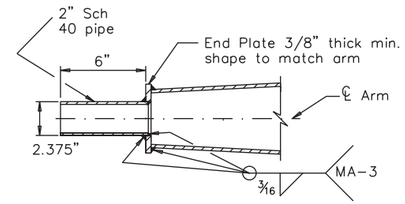

TENON DETAIL

VIBRATION WARNING

Mast Arms of SMA and DMA structures and clamp-on Arms of LMA structures of approximately 40 ft or longer are subject to harmonic vertical vibrations in light wind conditions due to the aeroelastic characteristics of a few of the myriads of possible combinations of the following: signal numbers, weights and positions; existence/solidity of backplates; presence of additional attachments to the arm, such as signs and cameras; arm-wind orientation; and arm-pole stiffness.

Such vibrations may cause fatigue damage to the structure and may lead to galloping in moderate wind conditions which may further damage the structure and alarm the public. Tests have indicated that when wind is blowing toward the back side of signal heads having un-vented backplates attached the probability of unacceptable harmonic vibration and/or galloping is rather high.

If backplates are not required for improved visibility they should not be applied to the signal heads or, if they must be applied, they should be vented as a first and inexpensive measure to mitigate vibrations.

The traffic signal mast arms shall be visually inspected in 5 to 20 mph wind conditions after installation of signal heads and any attachments, including any required backpates. If vertical movements with a total excursion (maximum upward excursion to maximum downward excursion) of more than approximately 8" are observed at the arm tip, a damping plate shall be fitted to the arm. See "Damping Plate Mounting Details" on standard sheet, MA-DPD-10.

This visual inspection shall be repeated after each modification of the structure that could affect its aeroelastic response. Excessive vibrations shall not be allowed to continue for more than two days.

Stainless steel bands (or Cables) and cast bracket as in "Astro-Brac", "Sky Bracket" or "Easy Bracket" with 1 1/2" Dia Threaded Coupling.

BRACKET ASSEMBLY

GENERAL NOTES:

Design conforms to 1994 AASHTO Standard Specifications for Structural Supports for Highway Signs, Luminaires, and Traffic Signals and Interim Specifications thereto. Design Wind Speed equals 80 mph plus a 1.3 gust factor.

Poles are designed to support one 8'-0" luminaire arm, one 9'-0" internally lighted street name sign and one traffic signal arm with a length as tabulated. The specified luminaire load applied at the end of the luminaire arm equals 60 lbs vertical dead load plus the horizontal wind load on an effective projected area of 1.6 sq ft. The specified internally lighted street name sign load applied 4.5 ft from the centerline of the pole equals 85 lbs vertical dead load plus horizontal wind load on an effective projected area of 11.5 sq ft. The specified signal load applied at the end of the traffic signal arm equals 180 lbs vertical dead load plus the horizontal wind load on an effective projected area of 32.4 sq ft (actual area times drag coefficient).

See Standard Sheet "MA-D" for pole details, "MA-C" for traffic signal arm connection details, "MA-C (ILSN)" for internally lighted street name sign arm connection details, "LUM-A" for luminaire arm and connection details, "SNS" for internally lighted street name sign details, and "TS-FD" for anchor bolt and foundation details. See "MA-C" for material specifications.

Fabrication shall be in accordance with Item 686, "Traffic Signal Pole Assemblies (Steel)" and with the details, dimensions, and weld procedures shown herein. Weld references call for preapproved weld procedures which the Fabricator must obtain prior to fabrication. Materials, fabrication tolerances, and shipping practices shall meet the requirements of this sheet and Item 686, "Traffic Signal Pole Assemblies (Steel)".

Unless otherwise noted, all parts shall be galvanized in accordance with Item 445, "Galvanizing", after fabrication.

Deviation from the details and dimensions shown herein require submission of shop drawings in accordance with Item 441, "Steel Structures". Alternate designs are not acceptable.

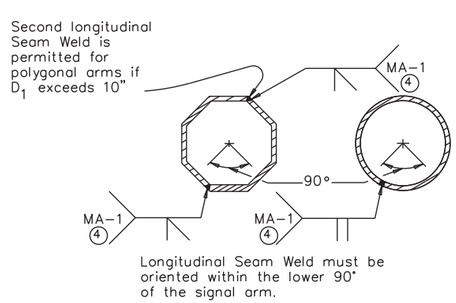

ARM WELD DETAIL

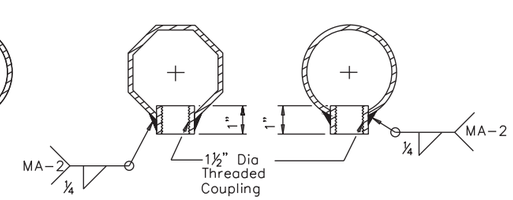

ARM COUPLING DETAILS

4 60% Min. penetration 100% pemetration within 6" of circumferential base welds.

SHEET 2 OF 2

Texas Department of Transportation
Traffic Operations Division

TRAFFIC SIGNAL SUPPORT STRUCTURES
SINGLE MAST ARM ASSEMBLY
(80 MPH WIND ZONE)
SMA-80(2)-12

©TxDOT August 1995

DN: MS	CK: JSY	DW: MMF	CK: JSY

REVISIONS
5-96
1-12

CONT	SECT	JOB	HIGHWAY
0915	17	076	COMMON ST
DIST		COUNTY	SHEET NO.
SAT		COMAL	83 OF 97

122B

DISCLAIMER: The use of this standard is governed by the "Texas Engineering Practice Act". No warranty of any kind is made by TxDOT for any purpose whatsoever. TxDOT assumes no responsibility for the conversion of this standard to other formats or for incorrect results or damages resulting from its use.

DATE: 2/8/2024
FILE: W:\00_TGC Project Files\NBR100\CAD\NBR100_GENERAL.dwg

DISCLAIMER:
The use of this standard is governed by the "Texas Engineering Practice Act". No warranty of any kind is made by TxDOT for any purpose whatsoever. TxDOT assumes no responsibility for the conversion of this standard to other formats or for incorrect results or damages resulting from its use.

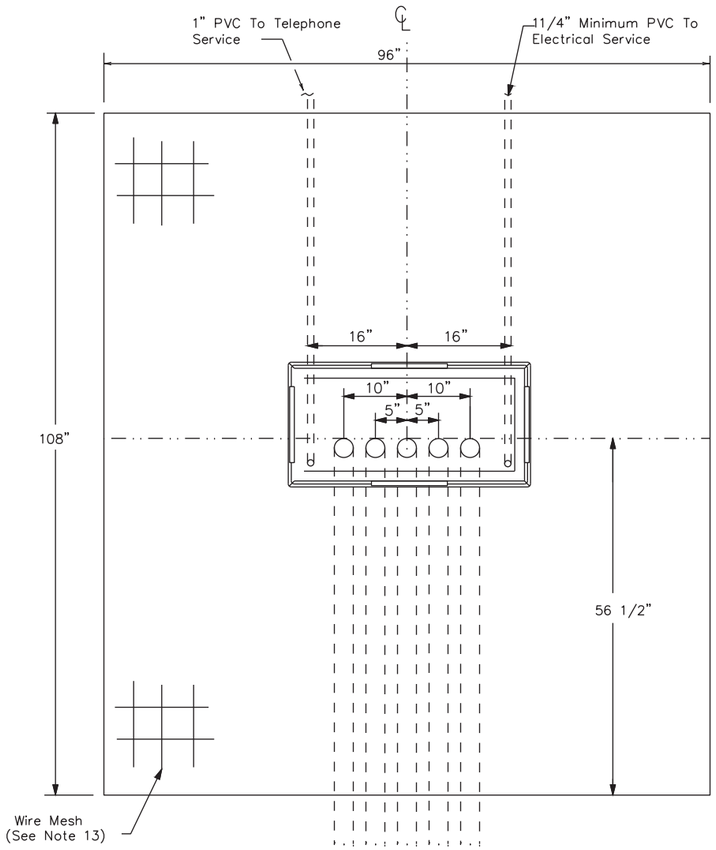

TOP VIEW

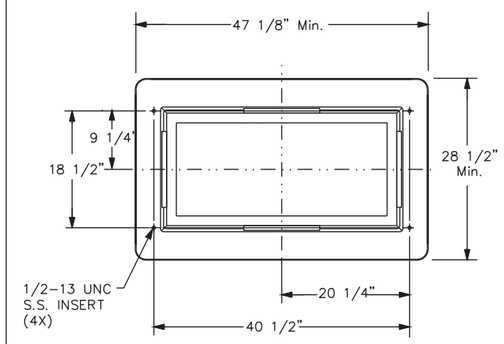

CABINET BASE

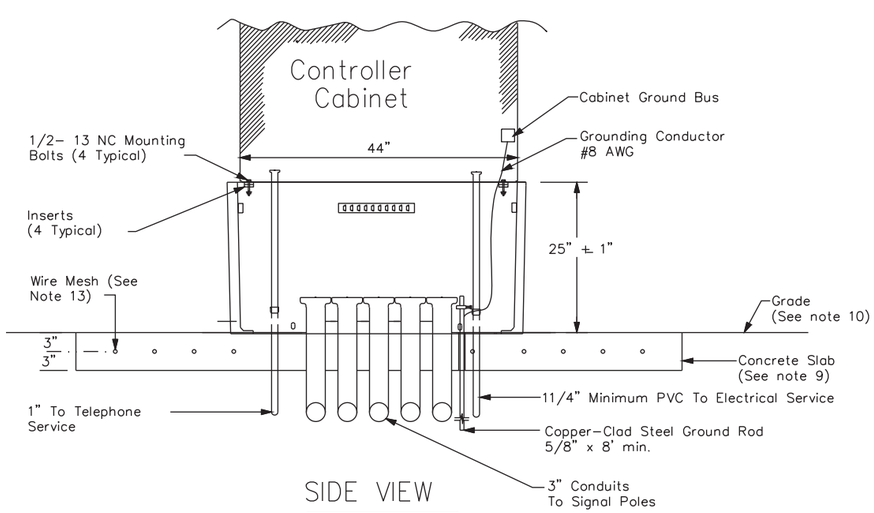

SIDE VIEW

TRAFFIC SIGNAL CONTROLLER BASE:

1. Provide a traffic signal controller base (cabinet base) manufactured of polymer concrete material consisting of calcareous and siliceous stone; glass fibers and thermoset polyester resin. The polymer concrete cabinet base must be reinforced on the inside of the cabinet base with fiberglass matting. Provide one of the following bases: Armorcast Part # A6001848X24, Quazite Model # PG3048Z709, or other as approved by TxDOT Traffic Safety Division.
2. The polymer concrete material must have a minimum compressive strength of 10,300 pounds per square inch (psi), minimum flexural strength of 3600 psi, and minimum shear strength of 3600 psi.
3. The polymer concrete cabinet base must conform to the dimensions shown and must accommodate a standard TxDOT basemount cabinet.
4. Supply the cabinet base with four 1#2"-13 UNC stainless steel inserts for attachment of the cabinet to the base. Inserts must withstand a minimum torque of 50 ft-lb and a minimum straight pull out strength of 750 lbs.
5. Provide the cabinet base with 4 cable racks mounted one on each side of the base 2" to 7 " from the top edge of the base. Unless approved otherwise, cable racks must be 1-1/2 x 9#16x 3#16inch steel channel with eight T-slots spaced at 1-1/2 inches. The cable racks must easily accommodate the insertion of tie wraps to attach field wiring to the racks to serve as strain relief. Secure cable racks to the base using 1#2"-13 UNC stainless steel screws and inserts.
6. The cabinet base, when secured to the concrete slab with controller cabinet attached, must withstand a minimum wind load of 125 mph or a 850 lb force applied at 49" above the bottom of the base without causing the base or cabinet to come out of their anchored position or cause any permanent deformation. The manufacturer must supply certification by an independent testing laboratory or sealed by a Texas Licensed Professional Engineer. Provide the cabinet base with hardware for attachment to a concrete slab.
7. The traffic signal base must be permanently marked either by impress or by permanent ink with the manufacturer's model number and name or logo.
8. Seal the base to the concrete with a silicone caulk bead and fastened to the slab per manufacturer's instructions.

CONCRETE SLAB:

9. Traffic signal controller pad must be a portland cement concrete slab poured in place, must conform to the dimensions shown, and must be level.
10. Grade earthwork such that it is flush with the concrete pad on all four sides, unless otherwise shown on the plans. Subsidiary to ITEM 680, four inch rip rap may be used in lieu of earthwork. Slopes shall gradually contour to match plans.
11. Bond a #8 AWG copper ground wire and an 8 ft ground rod bonded to the reinforcing mesh by a suitable UL Listed clamp and terminated to the cabinet grounding bus for the purpose of providing a local ground for the electrical grounding conductor. The electrical grounding conductor specified in Item 680-3.A.4 is required and must be terminated to the cabinet ground bus.
12. Install a PVC sleeve to prevent the ground rod from direct embedment in the slab.
13. Provide welded wire mesh 6X6-W2.9 X W2.9 for reinforcement. Provide joints and splices in the mesh with a minimum 6-inch overlap. Center the mesh between top and bottom and provide a minimum 3 inch cover on the edges.
14. Provide Class B concrete minimum for the slab in accordance with Item 421. Construct the slab in accordance with Item 531.

CONDUITS:

15. Stub up and run 3-inch conduits through the slab to the various traffic signal poles and ground boxes as shown on the layouts. Install the number of conduits as shown on layouts plus two additional 3 inch conduits for future use. Terminate the conduits with a bushing between 2 and 4-inches above the slab.
16. Extend conduits for future use at least 18-inches from the edge of the slab, terminate underground with a coupling, and cap and seal so that the seal can be removed without damaging the coupling. This must also apply to unused telephone conduit.
17. Stub up two separate conduits through the slab from the electrical and telephone services. Run the conduit for the electrical feed directly to the electrical service enclosure. Run the conduit for the telephone line directly to the telephone service, usually located on the same pole as the electrical service. Telephone must not under any circumstance share a conduit with any other function.
18. Terminate electric and telephone conduits above the slab with a coupling. After the base is installed, extend the conduits above the top of the base and secure to the base using a steel one-hole strap or similar suitable substitute.

CONTROLLER CABINET:

19. Anchor the controller cabinet to the base using four stainless steel 1/2-13 NC bolts.
20. The silicone caulk bead specified in Item 680.3.B must be RTV 133.

PAYMENT:

21. Bid TS-CF as subsidiary to Item 680.

Texas Department of Transportation

Traffic Safety Division Standard

TRAFFIC SIGNAL CONTROLLER CABINET BASE AND PAD

TS-CF-21

FILE: ts-cf-21.dgn	DN:	CK:	DW:	CK:
©TxDOT October 2000	CONT	SECT	JOB	HIGHWAY
REVISIONS 12-04 2-21	0915	17	076	COMMON ST
	DIST		COUNTY	SHEET NO.
	SAT		COMAL	84 OF 97

132

DATE: 2/8/2024
FILE: W:\00_TGC Project Files\NBR100\CAD\NBR100_GENERAL.dwg

DISCLAIMER: The use of this standard is governed by the "Texas Engineering Practice Act". No warranty of any kind is made by TxDOT for any purpose whatsoever. TxDOT assumes no responsibility for the conversion of this standard to other formats or for incorrect results or damages resulting from its use.

FOUNDATION DESIGN TABLE

FDN TYPE	DRILLED SHAFT DIA	REINFORCING STEEL: VERT BARS	REINFORCING STEEL: SPIRAL & PITCH	EMBEDDED DRILLED SHAFT LENGTH-ft (4),(5),(6): TEXAS CONE PENETROMETER N blows/ft: 10	15	40	ANCHOR BOLT DESIGN (1): ANCHOR BOLT DIA	Fy (ksi)	BOLT CIR DIA	ANCHOR TYPE	FOUNDATION DESIGN LOAD (2): MOMENT K-ft	SHEAR Kips	TYPICAL APPLICATION
24-A	24"	4- #5	#2 at 12"	5.7	5.3	4.5	3/4"	36	12 3/4"	1	10	1	Pedestal pole, pedestal mounted controller.
30-A	30"	8- #9	#3 at 6"	11.3	10.3	8.0	1 1/2"	55	17"	2	87	3	Mast arm assembly. (see Selection Table)
36-A	36"	10- #9	#3 at 6"	13.2	12.0	9.4	1 3/4"	55	19"	2	131	5	Mast arm assembly. (see Selection Table) 30' strain pole with or without luminaire.
36-B	36"	12- #9	#3 at 6"	15.2	13.6	10.4	2"	55	21"	2	190	7	Mast arm assembly. (see Selection Table) Strain pole taller than 30' & strain pole with mast arm
42-A	42"	14- #9	#3 at 6"	17.4	15.6	11.9	2 1/4"	55	23"	2	271	9	Mast arm assembly. (see Selection Table)

NOTES:

(1) Anchor bolt design develops the foundation capacity given under Foundation Design Loads.

(2) Foundation Design Loads are the allowable moments and shears at the base of the structure.

(3) Foundations may be listed separately or grouped according to similarity of location and type. Quantities are for the Contractor's information only.

(4) Field Penetrometer readings at a depth of approximately 3 to 5 feet may be used to adjust shaft lengths.

(5) If rock is encountered, the Drilled Shaft shall extend a minimum of two diameters into solid rock.

(6) Decimal lengths in Design Table are to allow interpolation for other penetrometer values. Round to nearest foot for entry into Summary Table.

FOUNDATION SUMMARY TABLE (3)

LOCATION IDENTIFICATION	AVG. N BLOW /ft.	FDN TYPE	NO. EA	DRILLED SHAFT LENGTH (FEET) (6): 24-A	30-A	36-A	36-B	42-A
T-1 (CENTRAL)	10	A	1		11			
T-2 (CENTRAL)	10	A	1		11			
T-1 (EAST)	10	A	1		11			
T-2 (EAST)	10	A	1		11			
TOTAL DRILLED SHAFT LENGTHS					44			

FOUNDATION SELECTION TABLE FOR STANDARD MAST ARM PLUS ILSN SUPPORT ASSEMBLIES (ft)

		FDN 30-A	FDN 36-A	FDN 36-B	FDN 42-A
80 MPH DESIGN WIND SPEED	MAX SINGLE ARM LENGTH	32'	48'		
	MAXIMUM DOUBLE ARM LENGTH COMBINATIONS	24' X 24'			
		28' X 28'			
		32' X 28'	32' X 32'		
			36' X 36'		
			40' X 36'		
			44' X 28'	44' X 36'	
100 MPH DESIGN WIND SPEED	MAX SINGLE ARM LENGTH		36'	44'	
	MAXIMUM DOUBLE ARM LENGTH COMBINATIONS		24' X 24'		
			28' X 28'		
			32' X 24'	32' X 32'	
				36' X 36'	
				40' x24'	40' X 36'
					44' x 36'

EXAMPLE:
1. For 80mph design wind speed, foundation 30-A can support up to a 32' arm with another arm up to 28'
2. For 100mph design wind speed, foundation 36-A can support a single 36' mast arm.

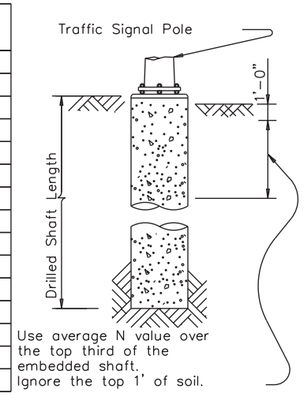

Use average N value over the top third of the embedded shaft. Ignore the top 1' of soil.

ANCHOR BOLT & TEMPLATE SIZES

BOLT DIA IN.	(7) BOLT LENGTH	TOP THREAD	BOTTOM THREAD	BOLT CIRCLE	R2	R1
3/4"	1'-6"	3"	—	12 3/4"	7 1/8"	5 5/8"
1 1/2"	3'-4"	6"	4"	17"	10"	7"
1 3/4"	3'-10"	7"	4 1/2"	19"	11 1/4"	7 3/4"
2"	4'-3"	8"	5"	21"	12 1/2"	8 1/2"
2 1/4"	4'-9"	9"	5 1/2"	23"	13 3/4"	9 1/4"

(7) Min dimensions given, longer bolts are acceptable.

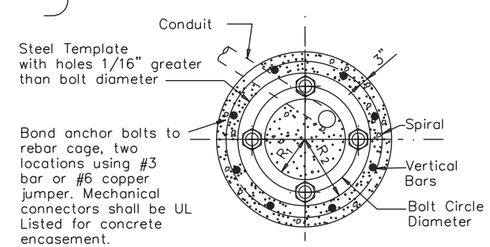

TOP VIEW

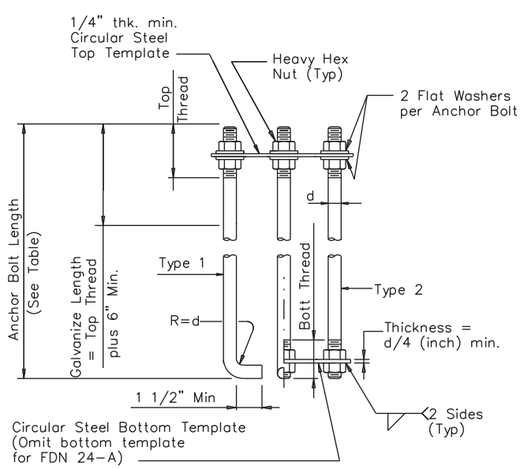

HOOKED ANCHOR (TYPE 1) | NUT ANCHOR (TYPE 2)

ANCHOR BOLT ASSEMBLY

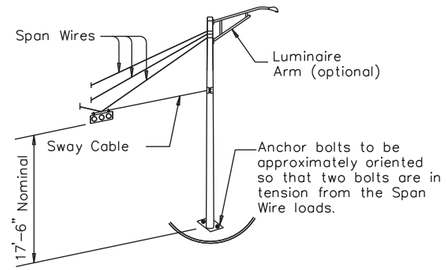

TYPICAL STRAIN POLE ASSEMBLY

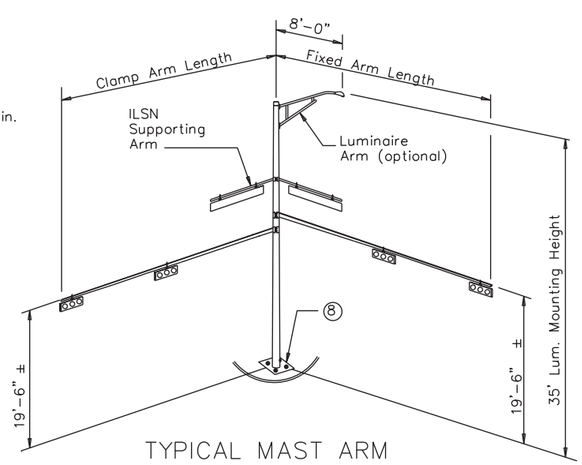

(8) Orient anchor bolts orthogonal with the fixed arm direction to ensure that two bolts are in tension under dead load.

TYPICAL MAST ARM ASSEMBLY

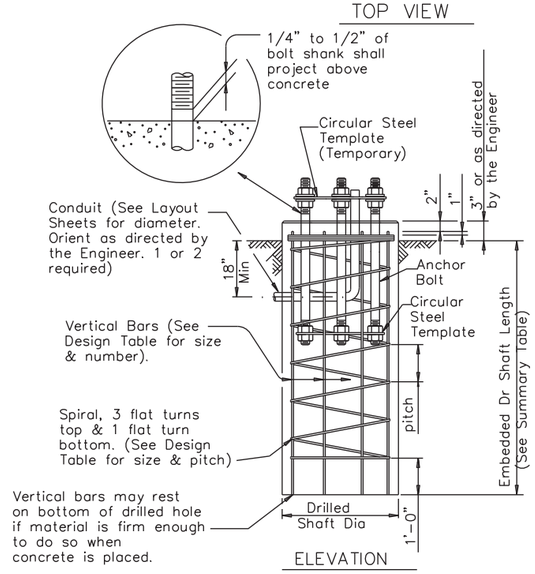

ELEVATION

FOUNDATION DETAILS

GENERAL NOTES:

Design conforms to 1994 AASHTO Standard Specifications for Structural Supports for Highway Signs, Luminaires and Traffic Signals and interim revisions thereto.

Reinforcing steel shall conform to Item 440, "Reinforcing Steel".

Concrete shall be Class "C".

Threads for anchor bolts and nuts shall be rolled or cut threads of 8UN series up to 2" in diameter or UNC series for all sizes. Bolts and nuts shall have Class 2A and 2B fit tolerances. Galvanized nuts shall be tapped after galvanizing.

Anchor bolts that are larger than 1" in diameter shall conform to "alloy steel" or "medium-strength mild steel" per Item 449, "Anchor Bolts". Anchor bolts that are 1" in diameter or less shall conform to ASTM A36. Galvanize a minimum of the top end thread length plus 6" for all anchor bolts unless otherwise noted. Exposed washers and exposed nuts shall be galvanized. All galvanizing shall be in accordance with Item 445, "Galvanizing".

Templates and embedded nuts need not be galvanized. Lubricate and tighten anchor bolts when erecting the structure in accordance with Item 449, "Anchor Bolts".

Texas Department of Transportation
Traffic Operations Division

TRAFFIC SIGNAL POLE FOUNDATION

TS-FD-12 (MOD)

STATE OF TEXAS — ROBERT J. GUTEKUNST — 129477 — LICENSED PROFESSIONAL ENGINEER
02/13/2024

©TxDOT August 1995

REVISIONS	DN: MS	CK: JSY	DW: MAO/MMF	CK: JSY/TEB
5-96 11-99 1-12	CONT 0915	SECT 17	JOB 076	HIGHWAY COMMON ST
	DIST SAT	COUNTY COMAL		SHEET NO. 85 OF 97

DATE: 2/8/2024
FILE: W:\00_TGC Project Files\NBR100\CAD\NBR100_GENERAL.dwg

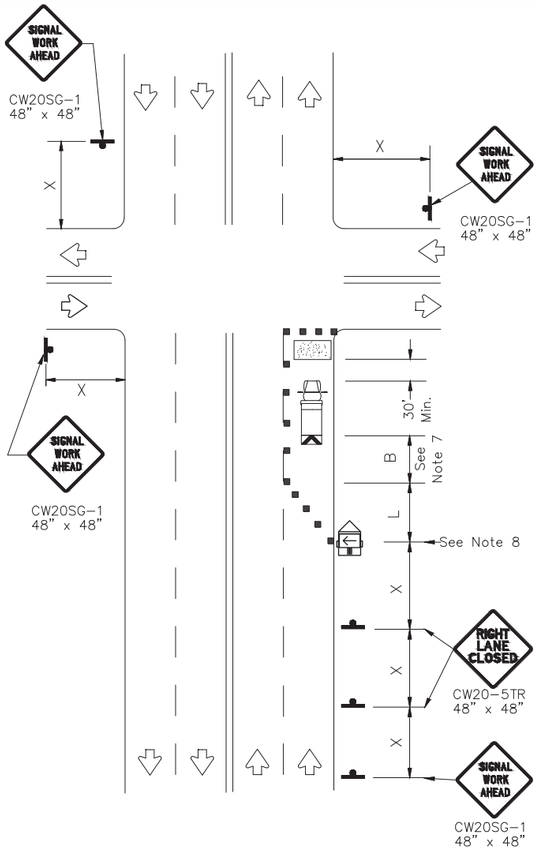

NEAR SIDE LANE CLOSURE

SHORT DURATION OR SHORT TERM STATIONARY

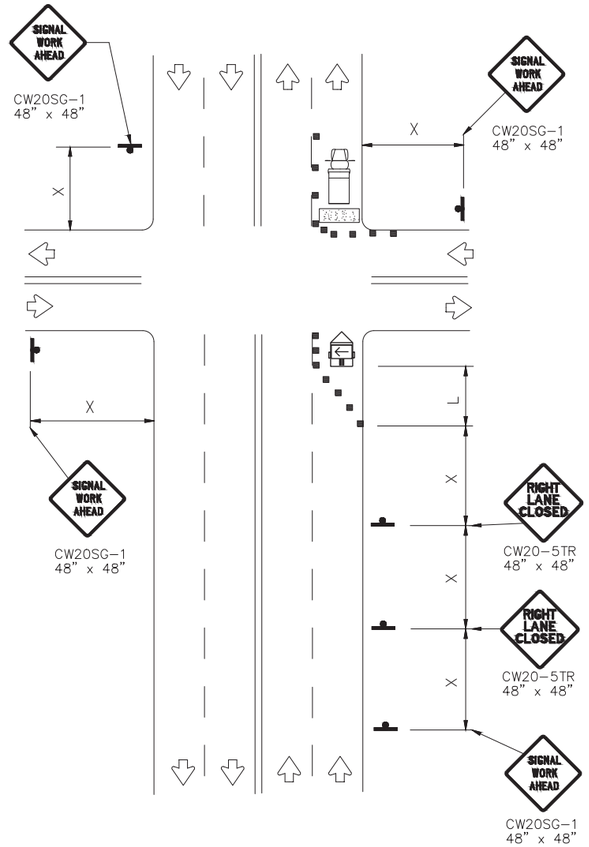

FAR SIDE RIGHT LANE CLOSURE

SHORT DURATION OR SHORT TERM STATIONARY

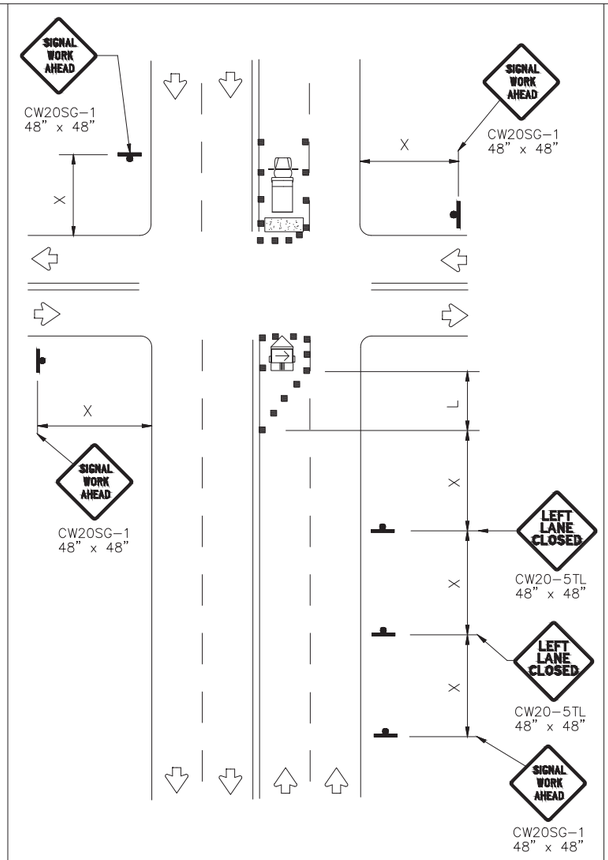

FAR SIDE LEFT LANE CLOSURE

SHORT DURATION OR SHORT TERM STATIONARY

LEGEND			
	Type 3 Barricade		Channelizing Devices
	Heavy Work Vehicle		Truck Mounted Attenuator (TMA)
	Trailer Mounted Flashing Arrow Board	M	Portable Changeable Message Sign (PCMS)
	Sign		Traffic Flow
	Flag		Flagger

Posted Speed *	Formula	Minimum Desirable Taper Lengths **			Suggested Maximum Spacing of Channelizing Devices		Minimum Sign Spacing "X" Distance	Suggested Longitudinal Buffer Space "B"
		10' Offset	11' Offset	12' Offset	On a Taper	On a Tangent		
30	$L = \frac{WS^2}{60}$	150'	165'	180'	30'	60'	120'	90'
35		205'	225'	245'	35'	70'	160'	120'
40		265'	295'	320'	40'	80'	240'	155'
45	L=WS	450'	495'	540'	45'	90'	320'	195'
50		500'	550'	600'	50'	100'	400'	240'
55		550'	605'	660'	55'	110'	500'	295'
60		600'	660'	720'	60'	120'	600'	350'
65		650'	715'	780'	65'	130'	700'	410'
70		700'	770'	840'	70'	140'	800'	475'
75		750'	825'	900'	75'	150'	900'	540'

* Conventional Roads Only

** Taper lengths have been rounded off.
L=Length of Taper(FT) W=Width of Offset(FT) S=Posted Speed(MPH)

WORKERS IN BUCKET TRUCKS SHALL NOT WORK ABOVE OPEN LANES OF TRAFFIC.

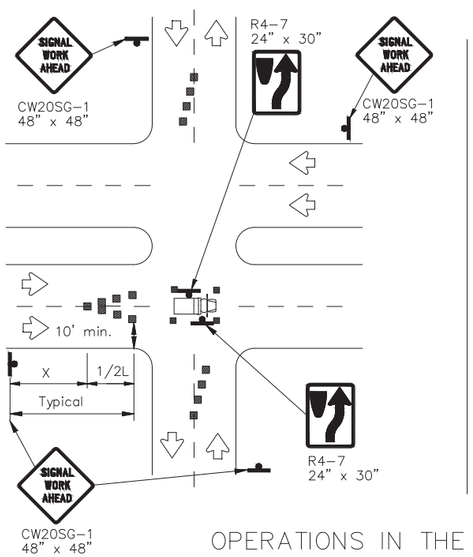

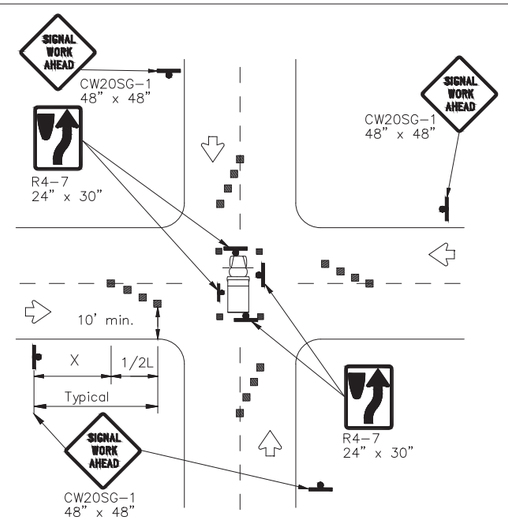

OPERATIONS IN THE INTERSECTION

SHORT DURATION

GENERAL NOTES

1. The minimum size channelizing device is the 28" cone. 42" Two-piece cones, drums, vertical panels or barricades will be required when the device must be left unattended at night.
2. Obstructions or hazards at the work area shall be clearly marked and delineated at all times.
3. Flaggers and Flagger Symbol (CW20-7) signs may be required according to field conditions.
4. Vehicles parked in roadway shall be equipped with at least two high intensity rotating, flashing, oscillating or strobe type lights.
5. High level warning devices (flag trees) may be used at corners of the vehicle.
6. When work operations are performed on existing signals, the signals may be placed in flashing red mode when approved by the engineer. If existing signals do not have power, All-Way Stop (R1-1 and R1-3P) signs may be implemented when approved by the engineer.
7. For Short-Term Stationary work the buffer space "B" from the above table should be used if field conditions permit. For Short Duration (less than 1 hour) any buffer space provided will enhance the safety of the setup.
8. The arrow board at this location may be omitted for Short Duration work if the work vehicle has an arrow board in operation. As an option, the arrow board may be placed at the end of the taper in the closed lane if space is not available at the beginning of the taper.
9. Signs and devices for the NEAR SIDE LANE CLOSURE may be altered for a left lane closure by using a LEFT LANE CLOSED (CW20-5TL) and adding channelizing devices on the centerline to protect the work space from opposing traffic.

DISCLAIMER: The use of this standard is governed by the "Texas Engineering Practice Act". No warranty of any kind is made by TxDOT for any purpose whatsoever. TxDOT assumes no responsibility for the conversion of this standard to other formats or for incorrect results or damages resulting from its use.

DATE: 2/8/2024
FILE: W:\00_TGC Project Files\NBR100\CAD\NBR100_GENERAL.dwg

SHEET 1 OF 2

Texas Department of Transportation — Traffic Operations Division Standard

TRAFFIC SIGNAL WORK TYPICAL DETAILS

WZ(BTS-1)-13

FILE: wzbts-13.dgn	DN: TxDOT	CK: TxDOT	DW: TxDOT	CK: TxDOT
©TxDOT April 1992	CONT	SECT	JOB	HIGHWAY
REVISIONS	0915	17	076	COMMON ST
2-98 10-99 7-13	DIST		COUNTY	SHEET NO.
4-98 3-03	SAT		COMAL	86 OF 97

DISCLAIMER: The use of this standard is governed by the "Texas Engineering Practice Act". No warranty of any kind is made by TxDOT for any purpose whatsoever. TxDOT assumes no responsibility for the conversion of this standard to other formats or for incorrect results or damages resulting from its use.

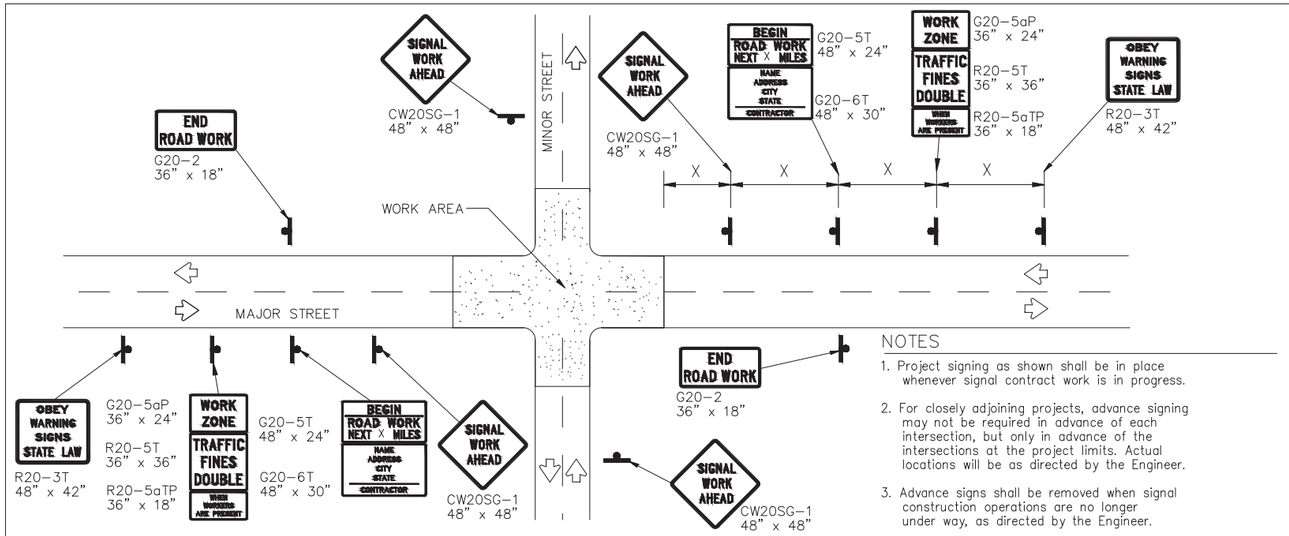

TYPICAL ADVANCE SIGNAL PROJECT SIGNING

FOR LONG TERM and INTERMEDIATE-TERM STATIONARY WORK OPERATIONS

NOTES

1. Project signing as shown shall be in place whenever signal contract work is in progress.
2. For closely adjoining projects, advance signing may not be required in advance of each intersection, but only in advance of the intersections at the project limits. Actual locations will be as directed by the Engineer.
3. Advance signs shall be removed when signal construction operations are no longer under way, as directed by the Engineer.
4. Warning sign spacing shown is typical for both directions.
5. See the Table on sheet 1 of 2 for Typical warning sign spacing.

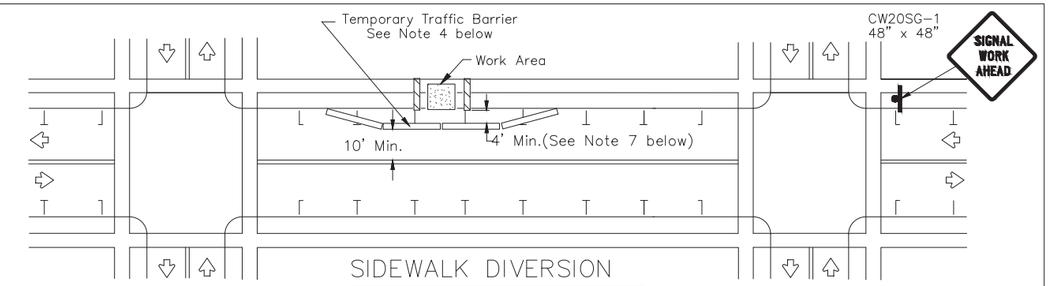

SIDEWALK DIVERSION

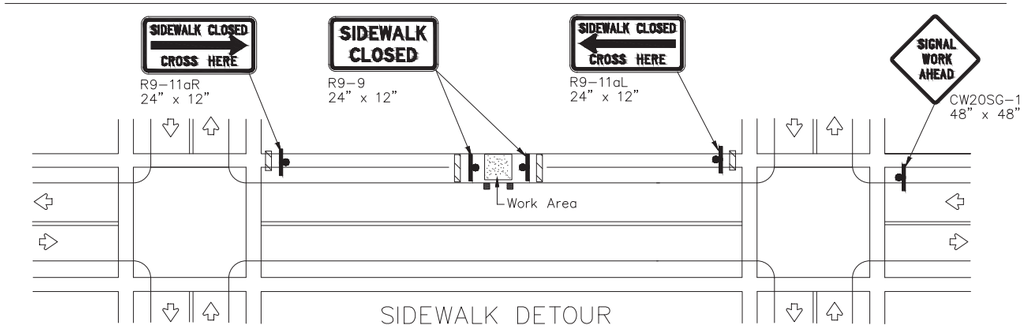

SIDEWALK DETOUR

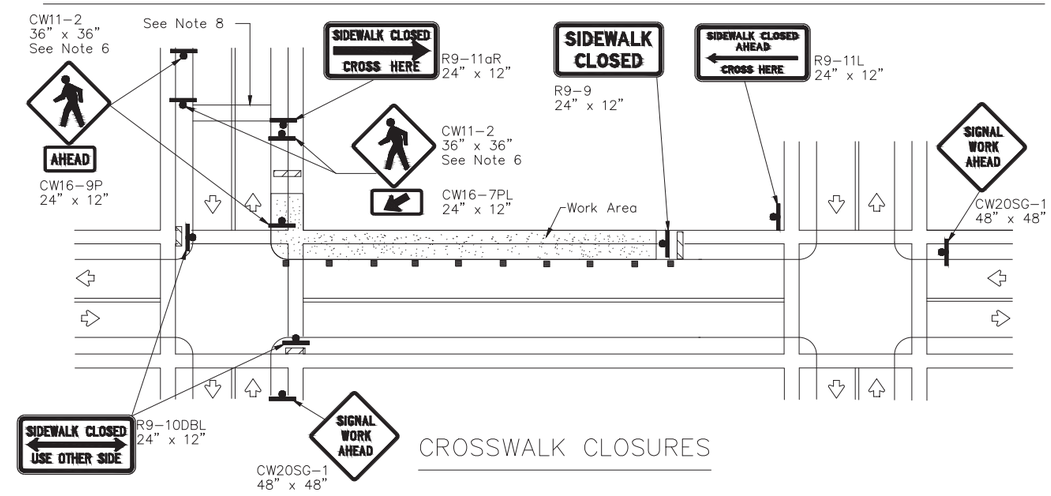

CROSSWALK CLOSURES

GENERAL NOTES FOR WORK ZONE SIGNS

1. Signs shall be installed and maintained in a straight and plumb condition.
2. Wooden sign posts shall be painted white.
3. Barricades shall NOT be used as sign supports.
4. Nails shall NOT be used to attach signs to any support.
5. All signs shall be installed in accordance with the plans or as directed by the Engineer.
6. The Contractor shall furnish the sign design shown in the plans or in the "Standard Highway Sign Designs for Texas" (SHSD).
7. The Contractor shall furnish sign supports and substrates listed in the "Compliant Work Zone Traffic Control Device List" (CWZTCD), installed as per the manufacturer's recommendations.
8. Temporary signs that have damaged or cracked substrates and/or damaged or marred reflective sheeting shall be replaced as directed by the Engineer.
9. Identification markings may be shown only on the back of the sign substrate. The maximum height of letters and/or company logos used for identification shall be 1".
10. Damaged wood posts shall be replaced. Splicing wood posts will not be allowed.

DURATION OF WORK

1. Work zone durations are defined in Part 6, Section 6G.02 of the Texas Manual on Uniform Traffic Control Devices (TMUTCD).

SIGN MOUNTING HEIGHT

1. Sign height of Long-term/Intermediate-term warning signs shall be as shown on Figure 6F-1 of the TMUTCD.
2. Sign height of Short-term/Short Duration warning signs shall be as shown on Figure 6F-2 of the TMUTCD.
3. Regulatory signs shall be mounted at least 7 feet, but not more than 9 feet, above the paved surface regardless of work duration.

REMOVING OR COVERING

1. When sign messages may be confusing or do not apply, the signs shall be removed or completely covered, unless otherwise approved by the Engineer.
2. When signs are covered, the material used shall be opaque, such as heavy mil black plastic, or other materials which will cover the entire sign face and maintain their opaque properties under automobile headlights at night without damaging the sign sheeting. Burlap, or heavy materials such as plywood or aluminum shall not be used to cover signs.
3. Duct tape or other adhesive material shall NOT be affixed to a sign face.
4. Signs and anchor stubs shall be removed and holes back filled upon completion of the work.

REFLECTIVE SHEETING

1. All signs shall be retroreflective and constructed of sheeting meeting the requirements of the DMS and color usage table shown on this sheet.

SIGN SUPPORT WEIGHTS

1. Weights used to keep signs from turning over should be sandbags filled with dry, cohesionless material.
2. The sandbags will be tied shut to keep the sand from spilling and to maintain a constant weight.
3. Rock, concrete, iron, steel or other solid objects will not be permitted for use as sign support weights.
4. Sandbags should weigh a minimum of 35 lbs and a maximum of 50 lbs.
5. Sandbags shall be made of a durable material that tears upon vehicular impact. Rubber, such as tire inner tubes, shall not be used.
6. Rubber ballasts designed for channelizing devices should not be used for ballast on portable sign supports. Sign supports designed and manufactured with rubber bases may be used when shown on the CWZTCD list.
7. Sandbags shall only be placed along or laid over the base supports of the traffic control device and shall not be suspended above ground level or hung with rope, wire, chains or other fastners. Sandbags shall be placed along the length of the skids to weigh down the sign support.
8. Sandbags shall NOT be placed under the skid and shall not be used to level sign supports placed on slopes.

LEGEND	
	Sign
	Channelizing Devices
	Type 3 Barricade

DEPARTMENTAL MATERIAL SPECIFICATIONS	
SIGN FACE MATERIALS	DMS-8300
FLEXIBLE ROLL-UP REFLECTIVE SIGNS	DMS-8310

COLOR	USAGE	SHEETING MATERIAL
ORANGE	BACKGROUND	TYPE B_{FL} OR TYPE C_{FL} SHEETING
WHITE	BACKGROUND	TYPE A SHEETING
BLACK	LEGEND & BORDERS	ACRYLIC NON-REFLECTIVE SHEETING

Only pre-qualified products shall be used. A copy of the "Compliant Work Zone Traffic Control Devices List" (CWZTCD) describes pre-qualified products and their sources and may be found at the following web address:
http://www.txdot.gov/txdot_library/publications/construction.htm

PEDESTRIAN CONTROL

1. Holes, trenches or other hazards shall be adequately protected by covering, delineating or surrounding the hazard with orange plastic pedestrian fencing or longitudinal channelizing devices, or as directed by the Engineer.
2. "CROSSWALK CLOSURES" as detailed above will require the Engineer's approval prior to installation.
3. R9 series signs shown may be placed on supports detailed on the BC standards or CWZTCD list, or when fabricated from approved lightweight plastic substrates, they may be mounted on top of a plastic drum at or near the location shown.
4. For speeds less than 45 mph longitudinal channelizing devices may be used instead of traffic barriers when approved by the Engineer. Attenuation of blunt ends and installation of water filled devices shall be as per BC(9) and manufacturer's recommendations.
5. Location of devices are for general guidance. Actual device spacing and location must be field adjusted to meet actual conditions.
6. Where pedestrians with visual disabilities normally use the closed sidewalk Detectable Pedestrian Barricades should be used instead of the Type 3 Barricades shown.
7. The width of existing sidewalk should be maintained if practical.
8. Pavement markings for mid-block crosswalks shall be paid for under the appropriate bid items.
9. When crosswalks or other pedestrian facilities are closed or relocated, temporary facilities shall be detectable and shall include accessibility features consistent with the features present in the existing pedestrian facility.

Texas Department of Transportation — Traffic Operations Division Standard

TRAFFIC SIGNAL WORK BARRICADES AND SIGNS

WZ(BTS-2)-13

FILE: wzbts-13.dgn	DN: TxDOT	CK: TxDOT	DW: TxDOT	CK: TxDOT
©TxDOT April 1992	CONT	SECT	JOB	HIGHWAY
REVISIONS	0915	17	076	COMMON ST
2-98 10-99 7-13	DIST	COUNTY		SHEET NO.
4-98 3-03	SAT	COMAL		87 OF 97

DATE: 2/8/2024
FILE: W:\00_TGC Project Files\NBR100\CAD\NBR100_GENERAL.dwg

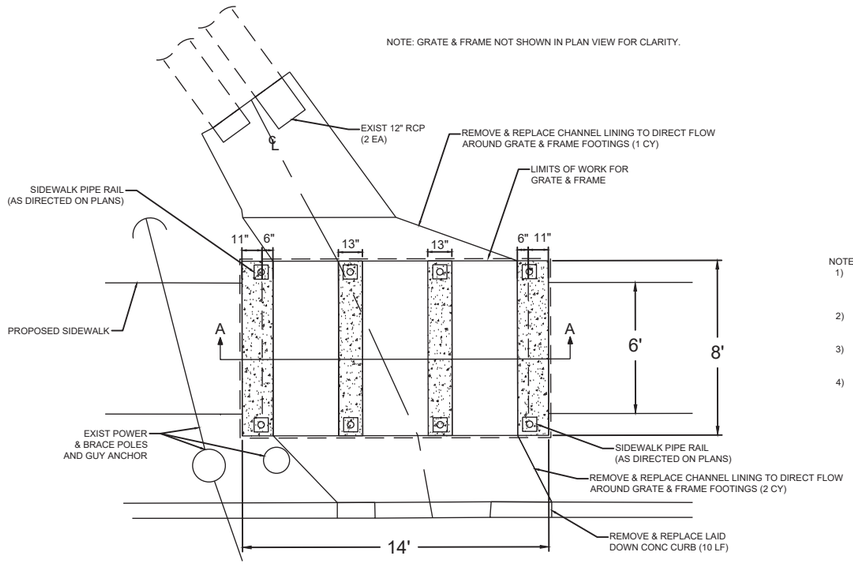

NOTES:
1) REMOVE AND DISPOSE OF PORTIONS OF EXISTING CONCRETE CHANNEL TO LIMITS SHOWN AND TIE IN FOOTINGS FOR GRATE & FRAME AND RAILING TO EXISTING GROUND.
2) "L" BARS MUST BE PARALLEL AND APPROVED BY ENGINEER. CONTRACTOR TO ENSURE BOLT DOWN LIDS LAY FLAT ON ALL FOUR CORNERS AT BOLT LOCATIONS.
3) CONCRETE AND REBAR FOR GRATE & FRAME INCIDENTAL TO FOOTINGS AND PAID FOR UNDER ITEM 420 - CL C CONC (MISC).
4) QUANTITY FOR GRATE & FRAME BASED ON 24-IN STANDARD LENGTH.

PLAN

N.T.S.

(SEE NOTE 1)

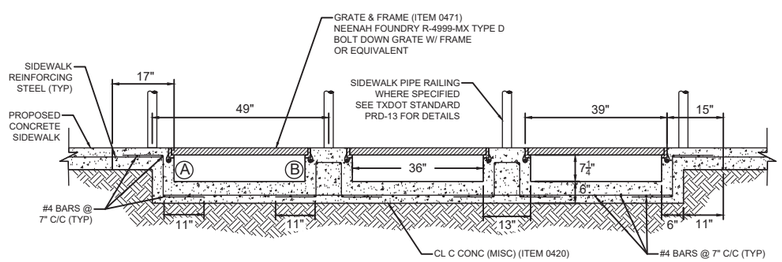

SECTION A-A

N.T.S.

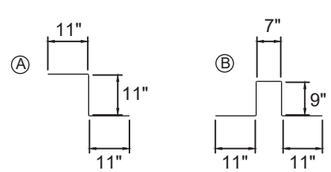

TABLE OF REINFORCING STEEL			
BAR	SIZE	SPAN	NO.
A	#4	2' - 9"	20
B	#4	3' - 11'	20

REINFORCING STEEL DETAIL

DRAINAGE CHANNEL CROSSING DETAIL

REV	DESCRIPTION	DATE	APPR
0	ISSUED FOR BID	02/12/24	AG

DRAINAGE CHANNEL CROSSING DETAIL

COMMON STREET PEDESTRIAN IMPROVEMENTS

CITY OF NEW BRAUNFELS
550 Landa Street | New Braunfels, TX 78130

DESIGN BY: KM
DRAWN BY: EFC
CHECKED BY: JB
APPROVED BY: AG

City of New Braunfels

ENGINEER:
THE GOODMAN CORPORATION
3200 TRAVIS, SUITE 200
HOUSTON, TEXAS 77006
www.TheGoodmanCorp.com
(713) 951-7951
TBPELS Firm Registration No. 19990

SURVEYOR:
MBCO ENGINEERING + SURVEYING

STATE OF TEXAS
ASHISH GHOSH
111103
LICENSED
PROFESSIONAL ENGINEER
2/13/2024

DATE: 02/12/2024
SCALE: N/A

SHEET NUMBER
88 OF 97

W:\00_TGC Project Files\NBR100\CAD\NBR100_GENERAL.dwg, 2/12/2024

DISCLAIMER: The use of this standard is governed by the "Texas Engineering Practice Act". No warranty of any kind is made by TxDOT for any purpose whatsoever. TxDOT assumes no responsibility for the conversion of this standard to other formats or for incorrect results or damages resulting from its use.

I. STORMWATER POLLUTION PREVENTION–CLEAN WATER ACT SECTION 402

Texas Pollutant Discharge Elimination System (TPDES) TXR 150000: Stormwater Discharge Permit or Construction General Permit (CGP) required for projects with 1 or more acres distrubed soil. Projects with any disturbed soil must protect for erosion and sedimentation in accordance with Item 506.

☐ No Action Required ☐ Required Action

Action No.

1. Prevent stormwater pollution by controlling erosion and sedimentation in accordance with TPDES Permit TXR 150000.
2. Comply with the Storm Water Pollution Prevention Plan (SW3P) and revise when necessary to control pollution or required by the Engineer.
3. Post Construction Site Notice (CSN) with SW3P information on or near the site, accessible to the public and Texas Commission on Environmental Quality (TCEQ), Environmental Protection Agency (EPA) or other inspectors.
4. When Contractor project specific locations (PSL's) increase disturbed soil area to 5 acres or more, Contractor shall submit Notice of Intent (NOI) to TCEQ and the Engineer.
5. NOI required: Yes ☐ No ☐

Note: If amount of soil disturbance changes, permit requirements may change.

II. WORK IN OR NEAR STREAMS, WATERBODIES AND WETLANDS CLEAN WATER ACT SECTIONS 401 AND 404

US Army Corps of Engineers (USACE) Permit required for filling, dredging, excavating or other work in any potential USACE jurisdictional water, such as, rivers, creeks, streams, or wetlands.

The Contractor shall adhere to all of the terms and conditions associated with the following permit(s):

☐ No Permit Required

☐ Nationwide Permit (NWP) 14 – Pre-construction Notice (PCN) not Required

☐ Nationwide Permit 14 – PCN Required

☐ Individual 404 Permit Required

☐ Other Nationwide Permit Required: NWP# _____

Required Actions: List waters of the US permit applies to, location in project and check Best Management Practices (BMPs) planned to control erosion, sedimentation and post-project total suspended solids (TSS).

1.

2.

3.

4.

401 Best Management Practices: (Not applicable if no USACE permit)

Erosion	Sedimentation	Post-Construction TSS
☐ Temporary Vegetation	☐ Silt Fence	☐ Vegetative Filter Strips
☐ Blankets/Matting	☐ Rock Berm	☐ Retention/Irrigation Systems
☐ Mulch	☐ Triangular Filter Dike	☐ Extended Detention Basin
☐ Sodding	☐ Sand Bag Berm	☐ Constructed Wetlands
☐ Interceptor Swale	☐ Straw Bale Dike	☐ Wet Basin
☐ Diversion Dike	☐ Brush Berms	☐ Erosion Control Compost
☐ Erosion Control Compost	☐ Erosion Control Compost	☐ Mulch Filter Berm and Socks
☐ Mulch Filter Berm and Socks	☐ Mulch Filter Berm and Socks	☐ Compost Filter Berm and Socks
☐ Compost Filter Berm and Socks	☐ Compost Filter Berm and Socks	☐ Vegetation Lined Ditches
	☐ Stone Outlet Sediment Traps	☐ Sand Filter Systems
	☐ Sediment Basins	☐ Sedimentation Chambers
		☐ Grassy Swales

III. CULTURAL RESOURCES

Refer to TxDOT Standard Specifications in the event historical issues or archeological artifacts are found during construction. Upon discovery of archeological artifacts (bones, burnt rock, flint, pottery, etc.) cease work in the immediate area and contact the Engineer immediately.

☐ No Action Required ☐ Required Action

Action No.

1.

2.

3.

4.

IV. VEGETATION RESOURCES

Preserve native vegetation to the extent practical. Contractor must adhere to Construction Specification Requirements Specs 162,164, 192, 193, 506, 730, 751, 752 in order to comply with requirements for invasive species, beneficial landscaping, and tree/brush removal commitments.

☐ No Action Required ☐ Required Action

Action No.

1.

2.

3.

4.

V. FEDERAL LISTED, PROPOSED THREATENED, ENDANGERED SPECIES, CRITICAL HABITAT, STATE LISTED SPECIES, CANDIDATE SPECIES AND MIGRATORY BIRDS.

☐ No Action Required ☒ Required Action

Action No.

1. MIGRATORY BIRD NESTS: Schedule construction activities as needed to meet the following requirements:

   A. Do not remove or destroy any active migratory bird nests (nests containing eggs and/or flightless birds) at any time of year. If there are any active nests, they shall not be removed until the nests become inactive.

   B. On/in structures, if there are any active nests, they shall not be removed until all nests become inactive. After inactive nests are removed and/or before nest activity begins, deterrent materials may be applied to the structures to prevent future nest building.

2. See Item 5 in General Notes.
3.
4.

If any of the listed species are observed, cease work in the immediate area, do not disturb species or habitat and contact the Engineer immediately. The work may not remove active nests from bridges and other structures during nesting season of the birds associated with the nests. If caves or sinkholes are discovered, cease work in the immediated area, and contact the Engineer immediately.

VI. HAZARDOUS MATERIALS OR CONTAMINATION ISSUES

General (applies to all projects):

Comply with the Hazard Communication Act (the Act) for personnel who will be working with hazardous materials by conducting safety meetings prior to beginning construction and making workers aware of potential hazards in the workplace. Ensure that all workers are provided with personal protective equipment appropiate for any hazardous materials used.

Obtain and keep on-site Material Safety Data Sheets (MSDS) for all hazardous products used on the project, which may include, but are not limited to the following categories: Paints, acids, solvents, asphalt products, chemical additives, fuels and concrete curing compounds or additives. Provide protected storage, off bare ground and covered, for products which may be hazardous. Maintain product labelling as required by the Act.

Maintain an adequate supply of on-site spill response materials, as indicated in the MSDS. In the event of a spill, take actions to mitigate the spill as indicated in the MSDS, in accordance with safe work practices, and contact the District Spill Coordinator immediately. The Contractor shall be responsible for the proper containment and cleanup of all product spills.

Contact the Engineer if any of the follwing are detected:

* Dead or distressed vegetation (not identified as normal)
* Trash piles, drums, canister, barrels, etc.
* Undesirable smells or odors
* Evidence of leaching or seepage of substances

Hazardous Materials or Contamination Issues Specific to this Project:

☐ No Action Required ☐ Required Action

Action No.

1.

2.

3.

Does the project involve the demolition of a span bridge?

☐ Yes ☐ No (No further action required)

If "Yes", a pre- demolition notification must be submitted to the Texas Department of State Health Services. The contractor shall contact TxDOT's Project Engineer 25 calendar days prior to the demolition of the bridges(s) on the project to assist with the notification.

VII. OTHER ENVIRONMENTAL ISSUES

(includes regional issues such as Edwards Aquifer District, etc.)

☐ No Action Required ☐ Required Action

Action No.

1.

2.

3.

Texas Department of Transportation
San Antonio District Standard

ENVIRONMENTAL PERMITS, ISSUES AND COMMITMENTS

EPIC

FILE: epic 2015-10-09 SAT.dgn	DN: TxDOT	CK: TxDOT	DW: BW		CK: GAG
©TxDOT OCTOBER 2015	CONT	SECT	JOB	HIGHWAY	
REVISIONS	0915	17	076	COMMON ST	
	DIST		COUNTY		SHEET NO.
	SAT		COMAL		89 OF 97

STORMWATER POLLUTION PREVENTION PLAN (SWP3):

This SWP3 has been developed in accordance with the TPDES Construction General Permit TXR150000 (CGP). The Texas Department of Transportation (TxDOT) ensures that project specifications include adequate best management practices (BMPs) for this project.

For all projects with any soil disturbing activities, TxDOT will maintain a SWP3 with all pertinent records, correspondence, environmental documents, etc. at the project field office. If no field office is available, then this SWP3 shall be kept in the appropriate TxDOT Area Office.

This SWP3 is consistent with requirements specified in applicable stormwater plans and the projects environmental permits, issues, and commitments (EPICs). A copy of the CGP is included in Attachment 2.12 of the SWP3 binder.

1.0 SITE/PROJECT DESCRIPTION

1.1 PROJECT CONTROL SECTION JOB (CSJ):
0915-17-076

1.2 PROJECT LIMITS:
From: Liberty Ave

To: LP 337

1.3 PROJECT COORDINATES:
BEGIN: (Lat) 29.709273 ,(Long) -98.120785

END: (Lat) 29.720046 ,(Long) -98.103712

1.4 TOTAL PROJECT AREA (Acres): 12

1.5 TOTAL AREA TO BE DISTURBED (Acres): 3

1.6 NATURE OF CONSTRUCTION ACTIVITY:
Construction of sidewalks, pedestrian hybrid beacons, curb and gutter, commercial and residential driveways

1.7 MAJOR SOIL TYPES:

Soil Type	Description
Krum clay (KrA)	0-1% slopes, well drained (54% of AOI)
Boerne fine sandy loam (BoB)	1-3% slopes, rarely flooded, well drained (17% of AOI)
Gruene clay (GrC)	1-5% slopes, well drained (12% of AOI)
Oakalla silty clay loam (Ok)	0-2% slopes, frequently flooded, well drained (10% of AOI)

1.8 PROJECT SPECIFIC LOCATIONS (PSLs):
PSLs must be depicted on the Environmental Layout Sheets in Attachment 1.2 of this SWP3. PSLs may be identified during preconstruction meetings or during the construction process. Please choose from the options below:

- ☐ PSLs determined during preconstruction meeting
- ☐ PSLs determined during construction
- ☐ No PSLs planned for construction

Type	Sheet #s

All off-ROW PSLs required by the Contractor are the Contractor's responsibility. The Contractor shall secure all permits required by local, state, federal laws for off-ROW PSLs. The contractor shall provide diagrams, areas of disturbance, acreage, and BMPs for all off-ROW PSLs within one mile of the project.

1.9 CONSTRUCTION ACTIVITIES:
(Use the following list as a starting point when developing the Construction Activity Schedule and Ceasing Record in Attachment 2.5.)

- ☒ Mobilization
- ☒ Install sediment and erosion controls
- ☒ Blade existing topsoil into windrows, prep ROW, clear and grub
- ☒ Remove existing pavement
- ☒ Grading operations, excavation, and embankment
- ☐ Excavate and prepare subgrade for proposed pavement widening
- ☐ Remove existing culverts, safety end treatments (SETs)
- ☐ Remove existing metal beam guard fence (MBGF), bridge rail
- ☐ Install proposed pavement per plans
- ☐ Install culverts, culvert extensions, SETs
- ☒ Install mow strip, MBGF, bridge rail
- ☐ Place flex base
- ☐ Rework slopes, grade ditches
- ☐ Blade windrowed material back across slopes
- ☒ Revegetation of unpaved areas
- ☒ Achieve site stabilization and remove sediment and erosion control measures
- ☐ Other: _____
- ☐ Other: _____
- ☐ Other: _____

1.10 POTENTIAL POLLUTANTS AND SOURCES:

- ☐ Sediment laden stormwater from stormwater conveyance over disturbed area
- ☐ Fuels, oils, and lubricants from construction vehicles, equipment, and storage
- ☐ Solvents, paints, adhesives, etc. from various construction activities
- ☐ Transported soils from offsite vehicle tracking
- ☒ Construction debris and waste from various construction activities
- ☐ Contaminated water from excavation or dewatering pump-out water
- ☒ Sanitary waste from onsite restroom facilities
- ☒ Trash from various construction activities/receptacles
- ☐ Long-term stockpiles of material and waste
- ☐ Other: _____
- ☐ Other: _____
- ☐ Other: _____

1.11 RECEIVING WATERS:
Receiving waters must be depicted on the Environmental Layout Sheets in Attachment 1.2 of this SWP3. Include Segment # for receiving waters.

Tributaries	Classified Waterbody

* Add (*) for impaired waterbodies with pollutant in ().

1.12 ROLES AND RESPONSIBILITIES: TxDOT

- ☒ Development of plans and specifications
- ☒ Submit Notice of Intent (NOI) to TCEQ (≥5 acres)
- ☒ Post Construction Site Notice
- ☒ Submit NOI/CSN to local MS4
- ☒ Perform SWP3 inspections
- ☒ Maintain SWP3 records and update to reflect daily operations
- ☒ Complete and submit Notice of Termination to TCEQ
- ☒ Maintain SWP3 records for 3 years
- ☐ Other: _____
- ☐ Other: _____
- ☐ Other: _____

1.13 ROLES AND RESPONSIBILITIES: CONTRACTOR

- ☒ Day To Day Operational Control
- ☒ Submit Notice of Intent (NOI) to TCEQ (≥5 acres)
- ☒ Post Construction Site Notice
- ☒ Submit NOI/CSN to local MS4
- ☒ Maintain schedule of major construction activities
- ☒ Install, maintain and modify BMPs
- ☒ Complete and submit Notice of Termination to TCEQ
- ☒ Maintain SWP3 records for 3 years
- ☐ Other: _____
- ☐ Other: _____
- ☐ Other: _____

1.14 LOCAL MUNICIPAL SEPARATE STORM SEWER SYSTEM (MS4) OPERATOR COORDINATION:

MS4 Entity

STORMWATER POLLUTION PREVENTION PLAN (SWP3)

© 2022

Sheet 1 of 2

Texas Department of Transportation

FED. RD. DIV. NO.	PROJECT NO.		SHEET NO.
			90
STATE	STATE DIST.	COUNTY	
TEXAS	SAT	COMAL	
CONT.	SECT.	JOB	HIGHWAY NO.
0915	17	076	COMMON ST

2/8/2024
W:\00_TGC Project Files\NBR100\CAD\NBR100_GENERAL.dwg

STORMWATER POLLUTION PREVENTION PLAN (SWP3):

2.0 BEST MANAGEMENT PRACTICES (BMPs) AND CONTROLS, INSPECTION, AND MAINTENANCE

The Contractor shall be the responsible party for implementing the BMPs described herein and for complying with the SWP3 for control of erosion and sedimentation during day-to-day operations. The Contractor shall implement changes to this SWP3 approved by TxDOT within the times specified in this SWP3 or the CGP.

2.1 EROSION CONTROL AND SOIL STABILIZATION BMPs:

T / P

- ☒ ☐ Protection of Existing Vegetation
- ☐ ☐ Vegetated Buffer Zones
- ☐ ☐ Soil Retention Blankets
- ☐ ☐ Geotextiles
- ☐ ☐ Mulching/ Hydromulching
- ☐ ☐ Soil Surface Treatments
- ☐ ☐ Temporary Seeding
- ☐ ☒ Permanent Planting, Sodding or Seeding
- ☒ ☐ Biodegradable Erosion Control Logs
- ☐ ☐ Rock Filter Dams/ Rock Check Dams
- ☐ ☐ Vertical Tracking
- ☐ ☐ Interceptor Swale
- ☐ ☐ Riprap
- ☐ ☐ Diversion Dike
- ☐ ☐ Temporary Pipe Slope Drain
- ☐ ☐ Embankment for Erosion Control
- ☐ ☐ Paved Flumes
- ☐ ☐ Other: _____
- ☐ ☐ Other: _____
- ☐ ☐ Other: _____
- ☐ ☐ Other: _____

2.2 SEDIMENT CONTROL BMPs:

T / P

- ☒ ☐ Biodegradable Erosion Control Logs
- ☐ ☐ Dewatering Controls
- ☒ ☐ Inlet Protection
- ☐ ☐ Rock Filter Dams/ Rock Check Dams
- ☐ ☐ Sandbag Berms
- ☒ ☐ Sediment Control Fence
- ☐ ☐ Stabilized Construction Exit
- ☐ ☐ Floating Turbidity Barrier
- ☐ ☐ Vegetated Buffer Zones
- ☐ ☐ Vegetated Filter Strips
- ☒ ☐ Other: Erosion Control Sandbags
- ☐ ☐ Other: _____
- ☐ ☐ Other: _____
- ☐ ☐ Other: _____

Refer to the Environmental Layout Sheets/ SWP3 Layout Sheets located in Attachment 1.2 of this SWP3

Sediment control BMPs requiring design capacity calculations (See SWP3 Attachment 1.3.):

T / P

- ☐ ☐ Sediment Trap
  - ☐ Calculated volume runoff from 2-year, 24-hour storm for each acre of disturbed area
  - ☐ 3,600 cubic feet of storage per acre drained
- ☐ ☐ Sedimentation Basin
  - ☐ Not required (<10 acres disturbed)
  - ☐ Required (>10 acres) and implemented.
    - ☐ Calculated volume runoff from 2-year, 24-hour storm for each acre of disturbed area
    - ☐ 3,600 cubic feet of storage per acre drained
  - ☐ Required (>10 acres), but not feasible due to:
    - ☐ Available area/Site geometry
    - ☐ Site slope/Drainage patterns
    - ☐ Site soils/Geotechnical factors
    - ☐ Public safety
    - ☐ Other: _____

2.3 PERMANENT CONTROLS:

(Coordinate post-construction BMPs with appropriate TxDOT maintenance sections.)

BMPs To Be Left In Place Post Construction:

Type	Stationing	
	From	To

Refer to the Environmental Layout Sheets/ SWP3 Layout Sheets located in Attachment 1.2 of this SWP3

2.4 OFFSITE VEHICLE TRACKING CONTROLS:

- ☐ Excess dirt/mud on road removed daily
- ☐ Haul roads dampened for dust control
- ☐ Loaded haul trucks to be covered with tarpaulin
- ☐ Stabilized construction exit
- ☐ Other: _____
- ☐ Other: _____
- ☐ Other: _____
- ☐ Other: _____

2.5 POLLUTION PREVENTION MEASURES:

- ☐ Chemical Management
- ☒ Concrete and Materials Waste Management
- ☒ Debris and Trash Management
- ☐ Dust Control
- ☒ Sanitary Facilities
- ☐ Other: _____
- ☐ Other: _____
- ☐ Other: _____
- ☐ Other: _____

2.6 VEGETATED BUFFER ZONES:

Natural vegetated buffers shall be maintained as feasible to protect adjacent surface waters. If vegetated natural buffer zones are not feasible due to site geometry, the appropriate additional sediment control measures have been incorporated into this SWP3.

Type	Stationing	
	From	To

Refer to the Environmental Layout Sheets/ SWP3 Layout Sheets located in Attachment 1.2 of this SWP3

2.7 ALLOWABLE NON-STORMWATER DISCHARGES:

- ☒ Fire hydrant flushings
- ☒ Irrigation drainage
- ☒ Pavement washwater (where spills or leaks have not occurred, and detergents are not used)
- ☒ Potable water sources
- ☒ Springs
- ☒ Uncontaminated groundwater
- ☒ Water used to wash vehicles or control dust
- ☒ Other allowable non-stormwater discharges as allowed by TPDES GP TXR150000.

2.8 INSPECTIONS:

All disturbed areas and erosion and sediment control devices shall be inspected at least once every seven (7) days. Inspections shall be performed by TxDOT as indicated on the Field Inspection and Maintenance Report Form 2118 and retained in Attachment 2.5 of this SWP3 .

2.9 MAINTENANCE:

Control measures shall be properly installed according to specifications. If it is determined that a BMP or control measure is not operating effectively, maintenance must be accomplished as soon as possible and before the next anticipated rain event, but in no case later than 7 calendar days after being able to access the site. Maintenance shall be performed by the Contractor as indicated on the Field Inspection and Maintenance Report Form 2118 and retained in Attachment 2.5 of this SWP3.

STORMWATER POLLUTION PREVENTION PLAN (SWP3)

© 2022

Sheet 2 of 2

Texas Department of Transportation

FED. RD. DIV. NO.	PROJECT NO.		SHEET NO.
			91
STATE	STATE DIST.	COUNTY	
TEXAS	SAT	COMAL	
CONT.	SECT.	JOB	HIGHWAY NO.
0915	17	076	COMMON ST

2/8/2024
W:\00_TGC Project Files\NBR100\CAD\NBR100_GENERAL.dwg

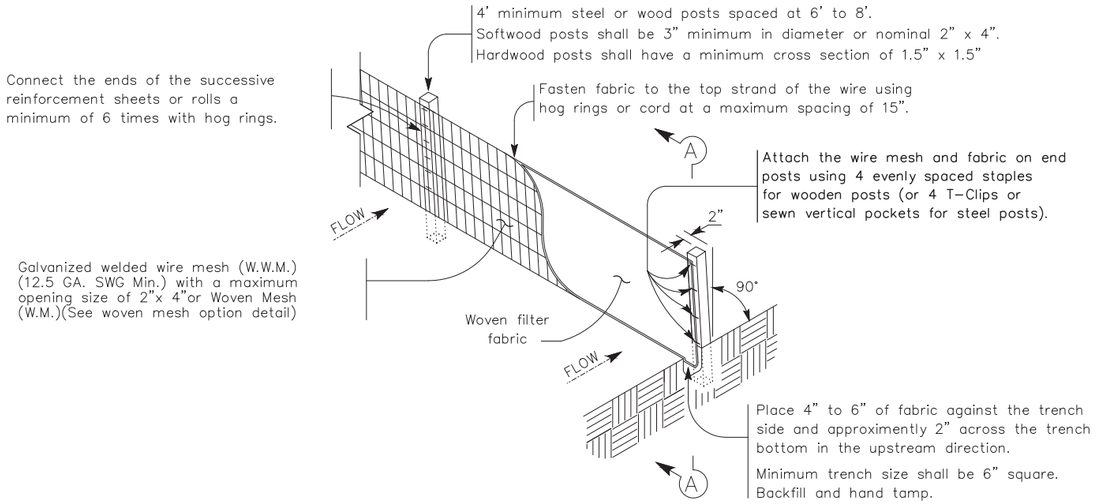

TEMPORARY SEDIMENT CONTROL FENCE

SCF

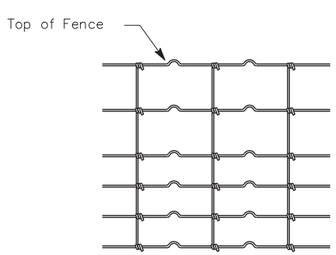

HINGE JOINT KNOT WOVEN MESH (OPTION) DETAIL

Galvanized hinge joint knot woven mesh (12.5 GA.SWG Min.) requires a minimum of five horizontal wires spaced at a maximum of 12 inches apart and all vertical wires spaced at a maximum of 12 inches apart.

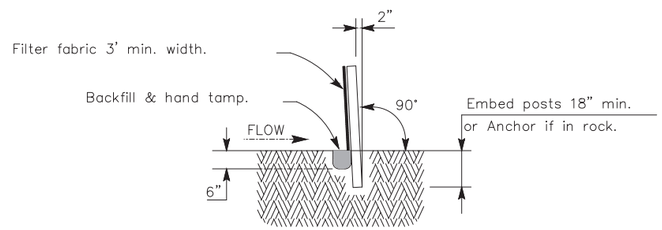

SECTION A–A

SEDIMENT CONTROL FENCE USAGE GUIDELINES

A sediment control fence may be constructed near the downstream perimeter of a disturbed area along a contour to intercept sediment from overland runoff. A 2 year storm frequency may be used to calculate the flow rate to be filtered.

Sediment control fence should be sized to filter a maximum flow through rate of 100 GPM/FT . ^{2}Sediment control fence is not recommended to control erosion from a drainage area larger than 2 acres.

LEGEND

Sediment Control Fence

SCF

GENERAL NOTES

1. Vertical tracking is required on projects where soil distributing activities have occurred unless otherwise approved.
2. Perform vertical tracking on slopes to temporarily stabilize soil.
3. Provide equipment with a track undercarriage capable of producing linear soil impressions measuring a minimum of 12" in length by 2" to 4" in width by 1/2" to 2" in depth.
4. Do not exceed 12" between track impressions.
5. Install continous linear track impressions where the minimum 12" length impressions are perpendicular to the slope or direction of water flow.

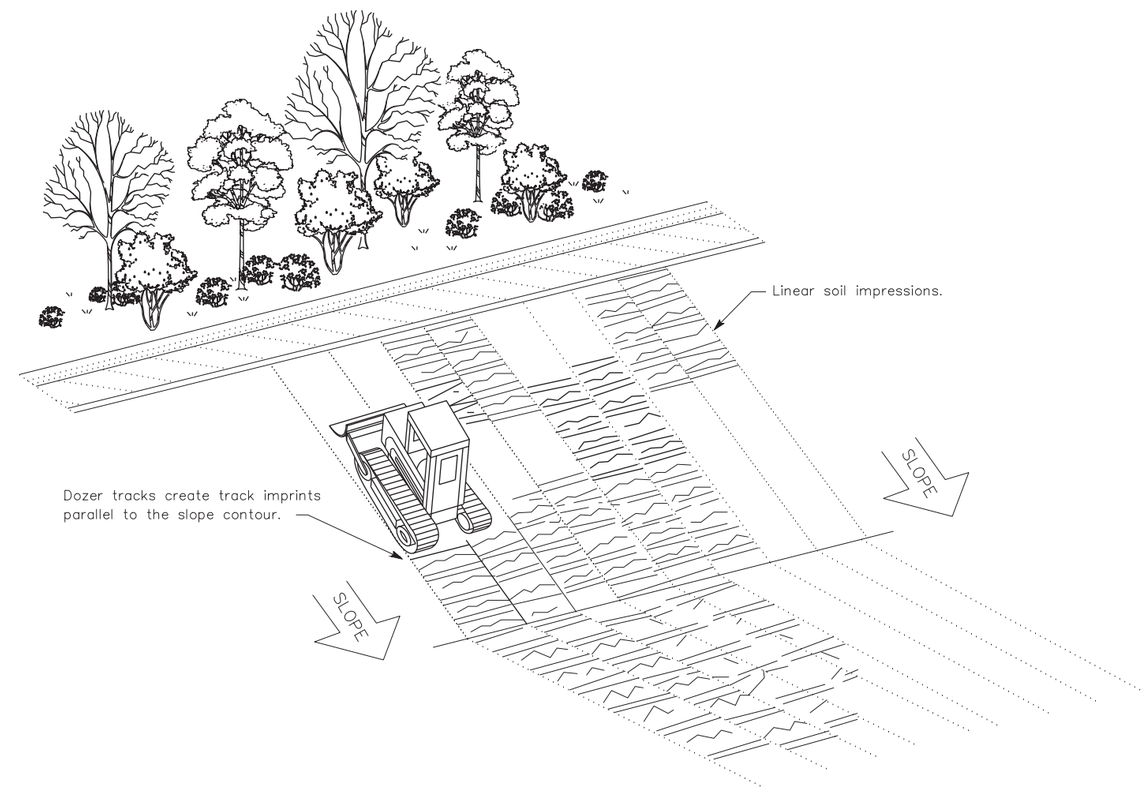

VERTICAL TRACKING

Texas Department of Transportation

Design Division Standard

TEMPORARY EROSION, SEDIMENT AND WATER POLLUTION CONTROL MEASURES

FENCE & VERTICAL TRACKING

EC(1)–16

FILE: ec116	DN: TxDOT	CK: KM	DW: VP	DN/CK: LS
© TxDOT: JULY 2016	CONT	SECT	JOB	HIGHWAY
REVISIONS	0915	17	076	COMMON ST
	DIST	COUNTY		SHEET NO.
	SAT	COMAL		92

DISCLAIMER: The use of this standard is governed by the "Texas Engineering Practice Act". No warranty of any kind is made by TxDOT for any purpose whatsoever. TxDOT assumes no responsibility for the conversion of this standard to other formats or for incorrect results or damages resulting from its use.

DATE 2/8/2024
FILE W:\00_TGC Project Files\NBR100\CAD\NBR100_GENERAL.dwg

DISCLAIMER: The use of this standard is governed by the "Texas Engineering Practice Act". No warranty of any kind is made by TxDOT for any purpose whatsoever. TxDOT assumes no responsibility for the conversion of this standard to other formats or for incorrect results or damages resulting from its use.

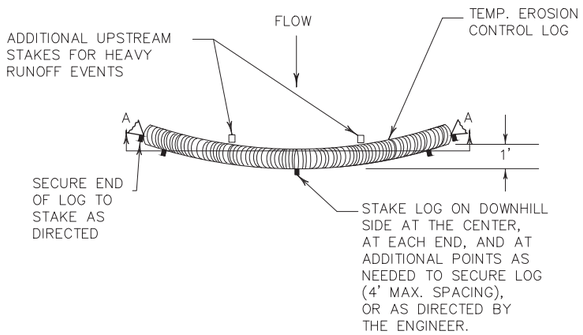

PLAN VIEW

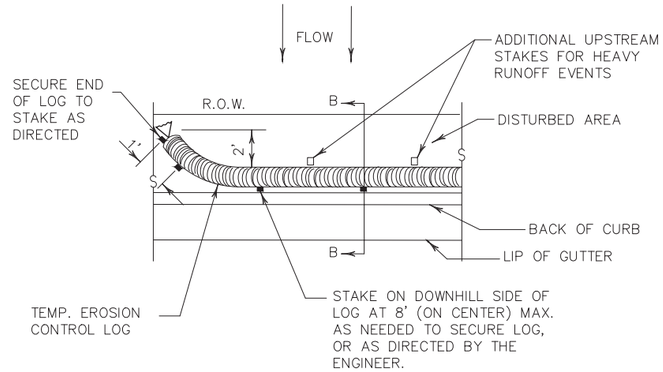

PLAN VIEW

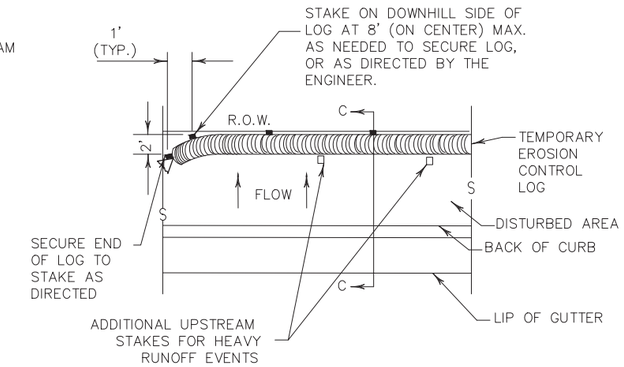

PLAN VIEW

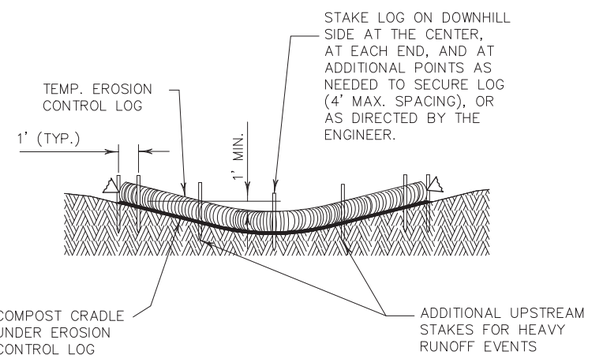

SECTION A–A

EROSION CONTROL LOG DAM

CL–D

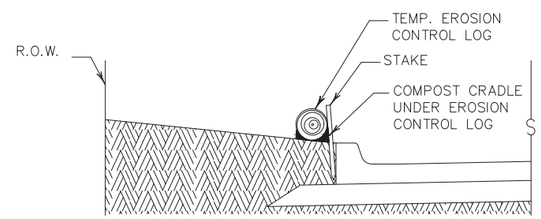

SECTION B–B

EROSION CONTROL LOG AT BACK OF CURB

CL–BOC

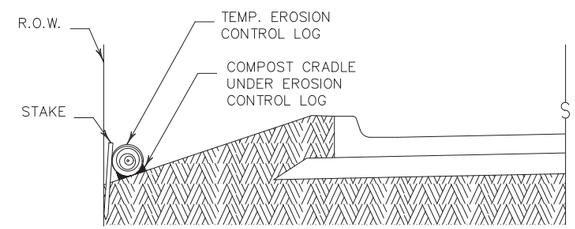

SECTION C–C

EROSION CONTROL LOG AT EDGE OF RIGHT–OF–WAY

CL–ROW

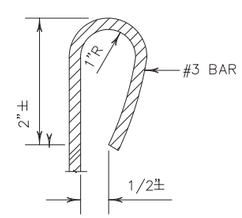

REBAR STAKE DETAIL

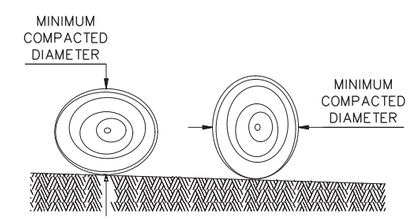

DIAMETER MEASUREMENTS OF EROSION CONTROL LOGS SPECIFIED IN PLANS

GENERAL NOTES:

1. EROSION CONTROL LOGS SHALL BE INSTALLED IN ACCORDANCE WITH MANFACTURER'S RECOMMENDATIONS, OR AS DIRECTED BY THE ENGINEER.
2. LENGTHS OF EROSION CONTROL LOGS SHALL BE IN ACCORDANCE WITH MANUFACTURER'S RECOMMENDATIONS AND AS REQUIRED FOR THE PURPOSE INTENDED.
3. UNLESS OTHERWISE DIRECTED, USE BIODEGRADABLE OR PHOTODEGRADABLE CONTAINMENT MESH ONLY WHERE LOG WILL REMAIN IN PLACE AS PART OF A VEGETATIVE SYSTEM. FOR TEMPORARY INSTALLATIONS, USE RECYCLABLE CONTAINMENT MESH.
4. FILL LOGS WITH SUFFICIENT FILTER MATERIAL TO ACHIEVE THE MINIMUM COMPACTED DIAMETER SPECIFIED IN THE PLANS WITHOUT EXCESSIVE DEFORMATION.
5. STAKES SHALL BE 2" X 2" WOOD OR #3 REBAR, 2'–4' LONG, EMBEDDED SUCH THAT 2" PROTRUDES ABOVE LOG, OR AS DIRECTED BY THE ENGINEER.
6. DO NOT PLACE STAKES THROUGH CONTAINMENT MESH.
7. COMPOST CRADLE MATERIAL IS INCIDENTAL & WILL NOT BE PAID FOR SEPARATELY.
8. SANDBAGS USED AS ANCHORS SHALL BE PLACED ON TOP OF LOGS & SHALL BE OF SUFFICIENT SIZE TO HOLD LOGS IN PLACE.
9. TURN THE ENDS OF EACH ROW OF LOGS UPSLOPE TO PREVENT RUNOFF FROM FLOWING AROUND THE LOG.
10. FOR HEAVY RUNOFF EVENTS, ADDITIONAL UPSTREAM STAKES MAY BE NECESSARY TO KEEP LOG FROM FOLDING IN ON ITSELF.

LEGEND

- CL–D — EROSION CONTROL LOG DAM
- CL–BOC — EROSION CONTROL LOG AT BACK OF CURB
- CL–ROW — EROSION CONTROL LOG AT EDGE OF RIGHT–OF–WAY
- CL–SST — EROSION CONTROL LOGS ON SLOPES STAKE AND TRENCHING ANCHORING
- CL–SSL — EROSION CONTROL LOGS ON SLOPES STAKE AND LASHING ANCHORING
- CL–DI — EROSION CONTROL LOG AT DROP INLET
- CL–CI — EROSION CONTROL LOG AT CURB INLET
- CL–GI — EROSION CONTROL LOG AT CURB & GRATE INLET

SEDIMENT BASIN & TRAP USAGE GUIDELINES

An erosion control log sediment trap may be used to filter sediment out of runoff draining from an unstabilized area.

Log Traps: The drainage area for a sediment trap should not exceed 5 acres. The trap capacity should be 1800 CF/Acre (0.5" over the drainage area).

Control logs should be placed in the following locations:

1. Within drainage ditches spaced as needed or min. 500' on center
2. Immediately preceding ditch inlets or drain inlets
3. Just before the drainage enters a water course
4. Just before the drainage leaves the right of way
5. Just before the drainage leaves the construction limits where drainage flows away from the project.

The logs should be cleaned when the sediment has accumulated to a depth of 1/2 the log diameter.

Cleaning and removal of accumulated sediment deposits is incidental and will not be paid for separately.

SHEET 1 OF 3

Texas Department of Transportation — Design Division Standard

TEMPORARY EROSION, SEDIMENT AND WATER POLLUTION CONTROL MEASURES

EROSION CONTROL LOG

EC(9)–16

FILE: ec916	DN: TxDOT	CK: KM	DW: LS/PT	CK: LS
© TxDOT: JULY 2016	CONT	SECT	JOB	HIGHWAY
REVISIONS	0915	17	076	COMMON ST
	DIST		COUNTY	SHEET NO.
	SAT		COMAL	93

DATE: 2/8/2024
FILE: W:\00_TGC Project Files\NBR100\CAD\NBR100_GENERAL.dwg

DISCLAIMER: The use of this standard is governed by the "Texas Engineering Practice Act". No warranty of any kind is made by TxDOT for any purpose whatsoever. TxDOT assumes no responsibility for the conversion of this standard to other formats or for incorrect results or damages resulting from its use.

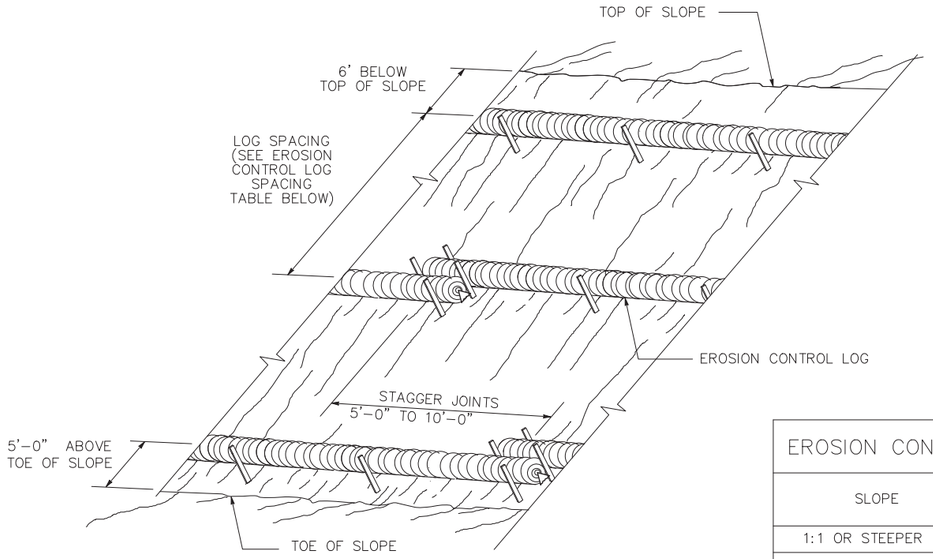

EROSION CONTROL LOGS ON SLOPES
STAKE AND TRENCHING ANCHORING

CL-SST

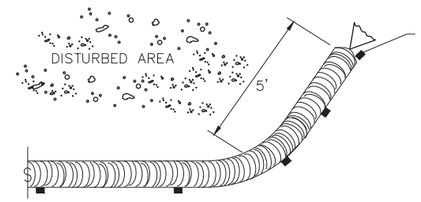

END SECTION RAP DETAIL

EROSION CONTROL LOG SPACING TABLE				
SLOPE	LOG DIAMETER			
	6"	8"	12"	18"
1:1 OR STEEPER	5'	10'	15'	20'
2:1	10'	20'	30'	40'
3:1	15'	30'	45'	60'
4:1 OR FLATTER	20'	40'	60'	80'

* ADJUSTMENTS CAN BE MADE FOR SOIL TYPE:
SOFT, LOAMY SOILS–ADJUST ROWS CLOSER TOGETHER;
HARD, ROCKY SOILS– ADJUST ROWS FARTHER APART

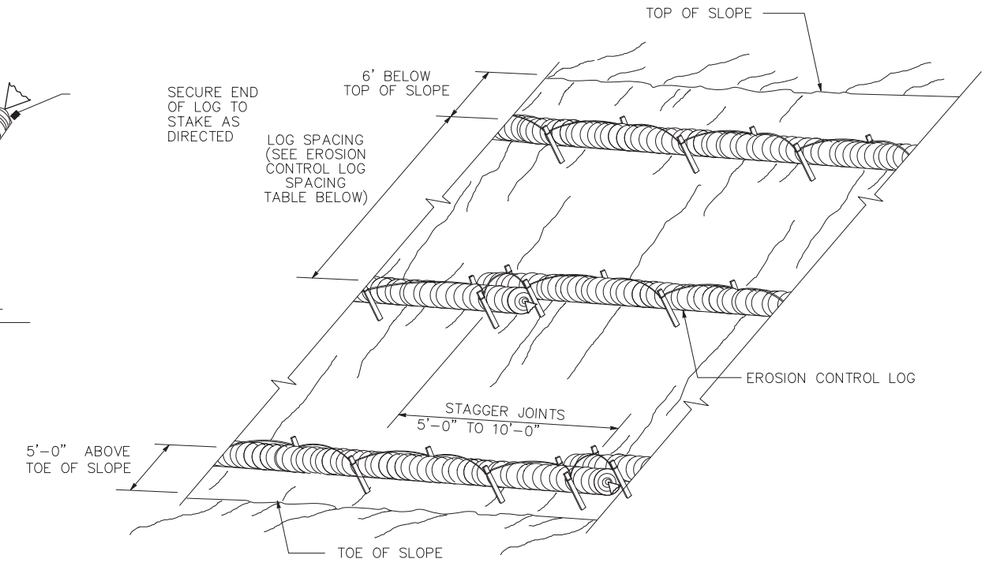

EROSION CONTROL LOGS ON SLOPES
STAKE AND LASHING ANCHORING

CL-SSL

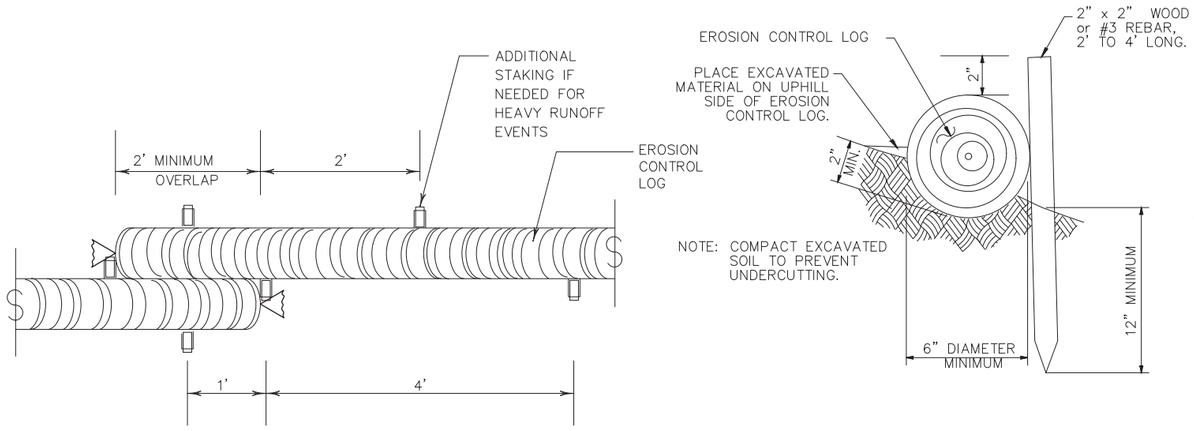

STAKE AND TRENCHING ANCHORING DETAIL

CL-SST

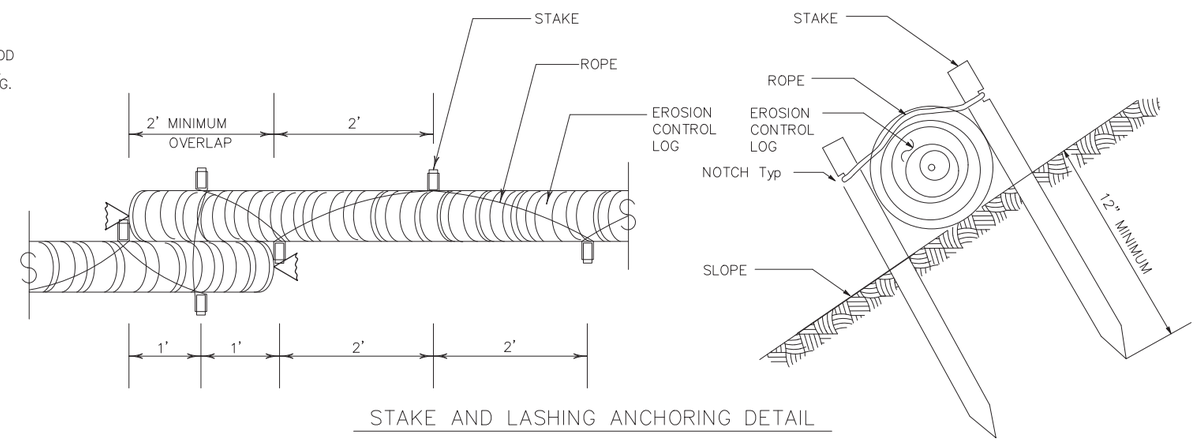

STAKE AND LASHING ANCHORING DETAIL

CL-SSL

TRENCH DEPTH TABLE	
LOG DIAMETER	DEPTH
6"	2"
8"	3"
12"	4"
18"	5"

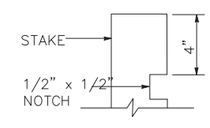

STAKE NOTCH DETAIL

SHEET 2 OF 3

Texas Department of Transportation — Design Division Standard

TEMPORARY EROSION, SEDIMENT AND WATER POLLUTION CONTROL MEASURES

EROSION CONTROL LOG

EC(9)–16

FILE: ec916	DN: TxDOT	CK: KM	DW: LS/PT	CK: LS
© TxDOT: JULY 2016	CONT	SECT	JOB	HIGHWAY
REVISIONS	0915	17	076	COMMON ST
	DIST	COUNTY		SHEET NO.
	SAT	COMAL		94

DATE: 2/8/2024
FILE: W:\00_TGC Project Files\NBR100\CAD\NBR100_GENERAL.dwg

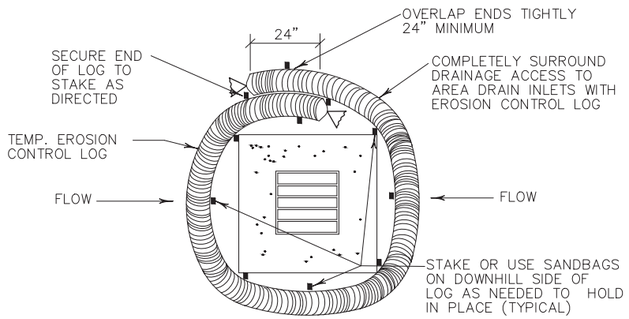

EROSION CONTROL LOG AT DROP INLET

CL-DI

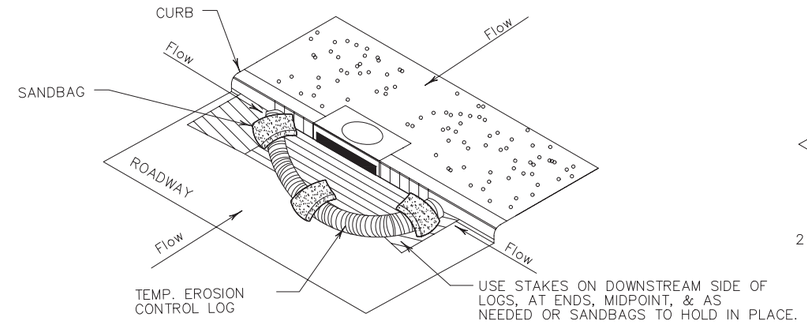

EROSION CONTROL LOG AT CURB INLET

CL-CI

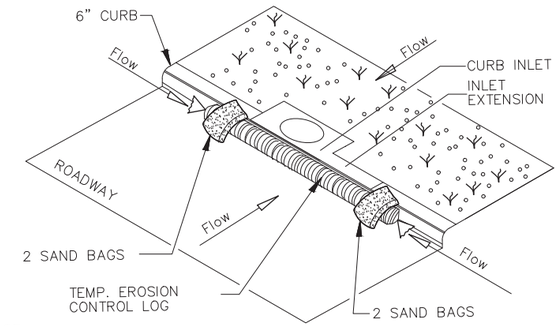

EROSION CONTROL LOG AT CURB INLET

CL-CI

NOTE:
EROSION CONTROL LOGS USED AT CURB INLETS SHOULD ONLY BE USED IF THEY WILL NOT IMPEDE TRAFFIC OR FLOOD THE ROADWAY OR WHEN THE STORM SEWER SYSTEM IS NOT FULLY FUNCTIONAL.

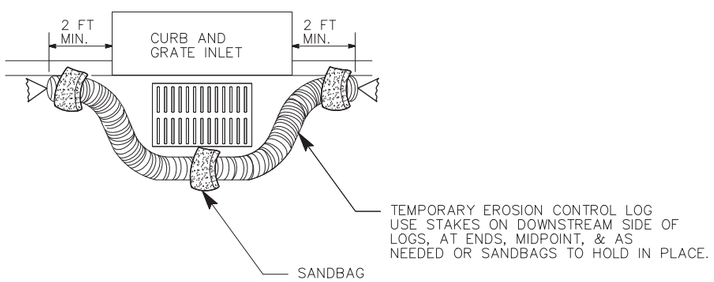

EROSION CONTROL LOG AT CURB & GRADE INLET

CL-GI

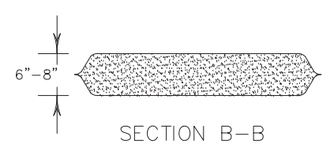

SECTION B-B

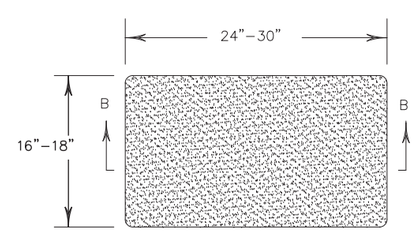

SANDBAG DETAIL

SHEET 3 OF 3

Texas Department of Transportation

Design Division Standard

TEMPORARY EROSION, SEDIMENT AND WATER POLLUTION CONTROL MEASURES

EROSION CONTROL LOG

EC(9)-16

FILE: ec916	DN: TxDOT	CK: KM	DW: LS/PT	CK: LS
© TxDOT: JULY 2016	CONT	SECT	JOB	HIGHWAY
REVISIONS	0915	17	076	COMMON ST
	DIST		COUNTY	SHEET NO.
	SAT		COMAL	95

TxDOT assumes no responsibility for the conversion of this standard to other formats or for incorrect results or damages resulting from its use.

DATE: 2/8/2024
FILE: W:\00_TGC Project Files\NBR100\CAD\NBR100_GENERAL.dwg

GENERAL NOTES FOR TREE PROTECTION

1. PROTECT AND INSURE THE CONTINUED GOOD HEALTH OF EXISTING TREES IDENTIFIED ON THE PLANS OR DIRECTED BY THE ENGINEER. PRESERVE ALL EXISTING VEGETATION WITHIN THE PREFERRED ROOT PROTECTION ZONE.

2. SECURE THE SERVICES OF A TREE CARE SPECIALIST TO PERFORM OR OVERSEE ANY OPERATION INVOLVING LIMB PRUNING, ROOT PRUNING, CHEMICAL APPLICATION, OR ASSESSMENT OF THE CONDITION OF TREES OR EFFECTS OF CONSTRUCTION ON TREES DESIGNATED FOR PROTECTION.

3. WITHIN THE PREFERRED ROOT PROTECTION ZONE, NONE OF THE FOLLOWING ACTIVITIES ARE ALLOWED:
PARKING OF ANY VEHICLES; ERECTION OF ANY SHED OR STRUCTURE; STORAGE OF ANY EQUIPMENT OR MATERIALS; USE BY PEOPLE FOR ANY REASON; DUMPING OF ANY LITTER, WASTE MATERIALS, OR LIQUIDS; IMPOUNDMENT OF WATER; ADDITION OF FILL–SOIL; EXCAVATION, BORING, OR TRENCHING OF ANY TYPE

DEFINITIONS

1. DRIPLINE – THE LINE ON THE GROUND DIRECTLY BELOW THE OUTER TIPS OR ENDS OF THE TREE LIMBS.

2. CRITICAL ROOT ZONE (CRZ) – THE GROUND AREA EXTENDING OUT FROM THE TREE TRUNK TO THE DRIPLINE.

3. PREFERRED ROOT PROTECTION ZONE (PRPZ) – THE GROUND AREA EXTENDING OUT FROM THE TREE TRUNK A DISTANCE EQUAL TO ONE AND ONE HALF OF THE DISTANCE FROM THE TRUNK TO THE DRIPLINE.

4. TREE CARE SPECIALIST – CERTIFIED ARBORIST OR PROFESSIONAL URBAN FORESTER.

5. O.C. – ON CENTER

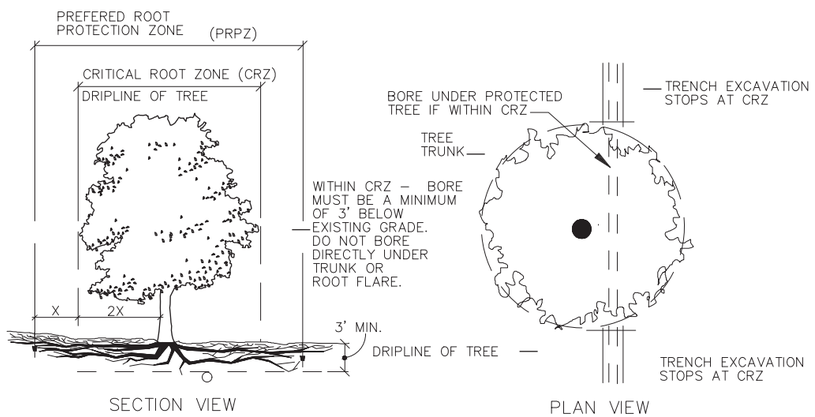

TRENCHING PAST TREES

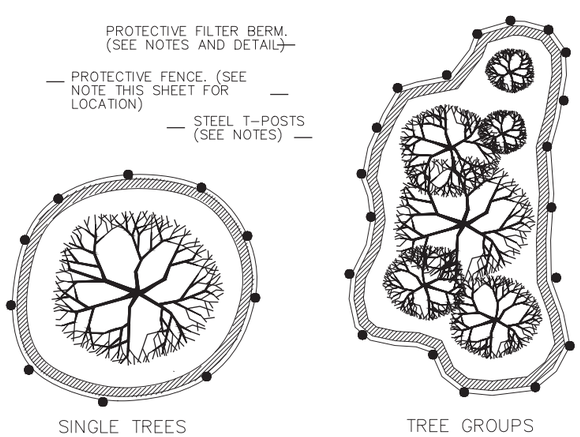

PLAN VIEW OF FENCING LAYOUT

CONSTRUCTION METHODS

1. PRIOR TO THE START OF CONSTRUCTION, MARK ALL TREES OR OTHER FEATURES INDICATED ON THE PLANS TO BE PROTECTED WITH YELLOW FLAGGING FOR APPROVAL BY THE ENGINEER.

2. PRIOR TO CONSTRUCTION, PRUNE PROTECTED TREES AS FOLLOWS:
A. REMOVE ANY DISEASED OR DEAD LIMBS AND CORRECT ANY PREVIOUS IMPROPER PRUNING B. REMOVE LIMBS FOR NECESSARY EQUIPMENT ACCESS (AS APPROVED BY THE ENGINEER). C. REMOVE LIMBS THAT WILL BE WITHIN TWENTY FEET (20') VERTICAL CLEARANCE OF VEHICLE TRAVEL LANES. D. REMOVE LIMBS THAT WILL BE WITHIN TEN FEET (10') VERTICAL CLEARANCE OF PEDESTRIAN AREAS.
3. PERFORM PRUNING USING ONLY TOOLS SPECIFICALLY DESIGNED FOR THE JOB AND IN ACCORDANCE WITH ANSI A300 PRUNING STANDARD. PRUNED MATERIAL BECOMES THE PROPERTY OF THE CONTRACTOR AND WILL BE DISPOSED OF OFF–SITE.

4. ERECT PROTECTIVE FENCING AT ALL TREES, GROUPS OF TREES, OR OTHER FEATURES AS SHOWN ON THE PLANS, OR DESIGNATED BY THE ENGINEER, OR OTHERWISE INDICATED FOR PROTECTION.

5. ERECT PROTECTIVE FENCING FOR TREES AT THE EDGE OF THE PRPZ. PLACE FENCING IN OTHER LOCATIONS ONLY WITH THE APPROVAL OF THE ENGINEER. THE FENCE MATERIAL SHALL BE CHAIN–LINK FENCE.
A. CHAIN–LINK FENCING SHALL BE SIX–FOOT (6') IN HEIGHT AND SUPPORTED BY EIGHT–FOOT (8') STEEL T–POSTS SPACED SIX FEET (6') O.C., DRIVEN A MINIMUM OF 20" INTO EXISTING GRADE.
B. THE FENCING SHALL BE CONTINUOUS BETWEEN POSTS AND SHALL BE FIRMLY ATTACHED TO THE POSTS WITH A MINIMUM OF 4 WIRE TIES.

6. PREPARE SIGNS WITH THE FOLLOWNG WORDING, AND INSTALL AT A MINIMUM OF 50' ON CENTER ALONG THE PROTECTIVE FENCING: PROTECTED AREA DO NOT ENTER THIS FENCE MAY NOT BE REMOVED OR MODIFIED WITHOUT THE PERMISSION OF THE ENGINEER CONTACT (PHONE NUMBER)

7. IF IT BECOMES NECESSARY TO LOCATE THE PROTECTIVE FENCING WITHIN SIX FEET (6') OF THE TRUNK OF A TREE, SECURE WOOD PLANKING TO THE TRUNK. THE PLANKING SHALL BE NOMINAL 2X4 DIMENSION LUMBER SECURED WITH A ROPE, BAND, OR STRAP OF SUFFICIENT DURABILITY TO REMAIIN IN PLACE FOR THE DURATION OF THE PROJECT. INSTALL PLANKS TO A HEIGHT OF TEN FEET (10') OR TO THE LOWEST MAJOR BRANCHES WHICHEVER IS LOWEST. DO NOT USE NAILS, SCREWS, OR ANY OTHER DAMAGING ATTACHMENTS UNDER ANY CIRCUMSTANCES.

8. ERECT A FILTER BERM COMPOSED OF WOOD CHIPS TO THE DIMENSIONS AND LOCATION SHOWN IN THE DETAILS. USE WOOD CHIPS LESS THAN OR EQUAL TO 5 IN. IN LENGTH WITH 95% PSSING A 2–IN. SCREEN AND LESS THAN 30% PASSING A 1–IN. SCREEN.

9. IMMEDIATELY REMOVE ANY CONCRETE, LIME OR OTHER CHEMICALS ACCIDENTALLY SPILLED WITHIN THE PROTECTED ROOT ZONE. IMMEDIATELY TREAT FOR ACCIDENTAL DAMAGE TO ANY TREE AS DIRECTED BY THE ENGINEER. SECURE THE SERVICES OF A TREE CARE SPECIALIST TO ASSESS AND/OR TREAT FOR THE DAMAGE. 10. MAINTAIN ALL TREE PROTECTION MATERIALS THROUGHOUT ENTIRE LENGTH OF PROJECT. REPAIR ANY DAMAGED TREE PROTECTION MATERIALS IMMEDIATELY AT THE CONTRACTOR'S EXPENSE. ADDITIONAL COMPOST OR MULCH MATERIALS MAY BE REQUIRED.

11. NO TRENCHING, EXCAVATING, FILLING, OR COMPACTION IS ALLOWED WITHIN THE CRITICAL ROOT ZONE EXCEPT AS SPECIFICALLY IDENTIFIED IN THE PLANS OR APPROVED BY THE ENGINEER. 12. IF ROOT REMOVAL OR EXCAVATION IS UNAVOIDABLE WITHIN THE PREFERRED ROOT PROTECTION ZONE, HAND–DIG TO EXPOSE MAJOR TREE ROOTS OF ONE–INCH (1") DIAMETER OR GREATER. ONCE EXPOSED, PRUNE ROOTS WITH SHARP, CLEAN TOOLS DESIGNED FOR THAT PURPOSE. BACKFILL EXPOSED ROOT ENDS AS SOON AS POSSIBLE OR COVERED WITH SIX INCHES (6") SHREDDED HARDWOOD MULCH WITHIN THE SAME DAY OF EXCAVATION.
13. PRUNE ANY ROOTS EXPOSED BY CONSTRUCTION FLUSH WITH THE SOIL. BACKFILL ROOT AREAS WITH GOOD QUALITY TOPSOIL AS SOON AS POSSIBLE. IF EXPOSED ROOTS ARE NOT TO BE BACKFILLED WITHIN TWO DAYS, COVER THEM WITH A MINIMUM OF SIX INCHES (6") OF SHREDDED HARDWOOD MULCH. 14. SHOULD ACCESS ACROSS THE CRITICAL ROOT ZONE BE NECESSARY, OPEN ONLY THAT PORTION NEEDED FOR ACCESS AND THE COMPLETION OF THE TASK. INSTALL SIX INCHES (6") OF SHREDDED HARDWOOD BARK IN ACCESS AREAS BEFORE ANY WHEELED OR TRACKED VEHICES ENTER THE CRITICAL ROOT ZONE. REPLACE PROTECTIVE FENCING TO ITS ORIGINAL POSITIONS AS SOON AS POSSIBLE AFTER THE CONSTRUCTION TASK IS COMPLETED AND REMOVE THE BARK MULCH LAYER AND STOCKPILE OUTSIDE THE CRITICAL ROOT ZONE. 15. FOR PROPOSED UNDERGROUND UTILITIES SHOWN ELSEWHERE IN THE PLANS THAT CROSS THE CRITICAL ROOT ZONE, BORE AT A MINIMUM OF THREE FEET (3') BELOW EXISTING GRADE. TRENCH FOR BORE SHALL NOT INTRUDE INTO CRITICAL ROOT ZONE.

POST CONSTRUCTION

1. UPON THE COMPLETION OF CONSTRUCTION ACTIVITIES, CONDUCT A FINAL ASSESSMENT BY A TREE CARE SPECIALIST TO DETERMINE THE HEALTH AND CONDITION OF THE TREES. THE SPECIALIST SHOULD PROVIDE RECOMMENDATIONS FOR THE FOLLOWING INSPECTION ITEMS FOR NEEDED POST–CONSTRUCTION MEASURES:
A. DAMAGE TO ANY PART OF THE TREE
B. CHANGES IN SOILS STRUCTURE SUCH AS COMPACTION, FILLS, EROSION, OR LOSS OF ORGANIC MATTER

IMPLEMENT THE RECOMMENDATIONS MADE BY THE TREE CARE SPECIALIST AS DIRECTED. AT A MINIMUM, PERFORM THE FOLLOWING:
A. REMOVE TREES THAT MAY HAVE DIED DURING CONSTRUCTION
B. REMOVE ANY FILL SOIL FROM ROOT ZONES
C. REPAIR AREAS DAMAGED DURING CONSTRUCTION

2. AFTER ALL CONSTRUCTION ACTIVITIES HAVE CEASED, REMOVE ALL TREE PROTECTION MATERIALS FROM THE PROJECT SITE. MULCH MAY BE SPREAD OVER THE SITE IN A TWO–INCH THICK MAXIMUM LAYER.

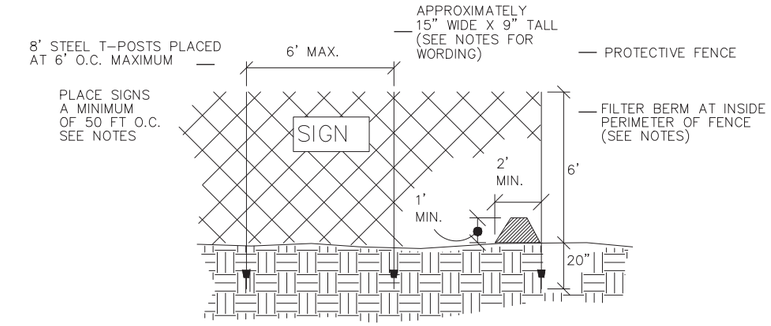

PROTECTIVE FENCE AND SIGN PLACEMENT

PROTECTED AREA
DO NOT ENTER
This fence may not be removed or modified without the permission of the Engineer
CONTACT XXX–XXX–XXXX

—1" BLACK, BOLD LETTERS
—WHITE BACKGROUND
— 3/4" BLACK LETTERS

SIGNAGE FOR PROTECTED AREAS

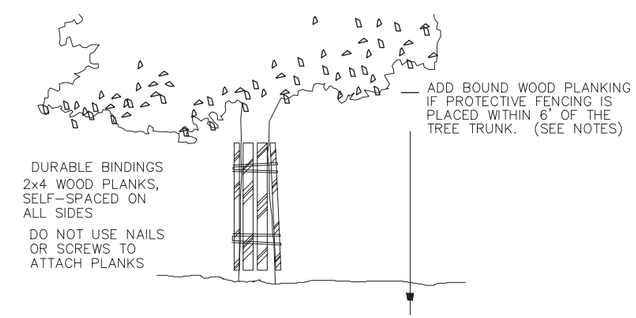

WOOD PLANKING INSTALLATION

THIS WORK AND ALL ASSOCIATED MATERIALS WILL NOT BE PAID FOR DIRECTLY, BUT WILL BE SUBSIDIARY TO ITEM 100 – PREPARING RIGHT OF WAY.

NOT TO SCALE

© 2018 Texas Department of Transportation
San Antonio District

TREE PROTECTION

San Antonio District Standard

T:Engdata/Standards/SATreeProtection.dgn	PREPARED BY AND FOR USE OF TxDoT.					
ORIGINAL DRAWING DATE: 12–18–18	STATE DISTRICT	FEDERAL REGION	FEDERAL AID PROJECT			SHEET
REVISIONS	SAT	6				96 OF 97
	COUNTY		CONTROL	SECTION	JOB	HIGHWAY
	COMAL		0915	17	076	COMMON ST

2/9/2024
W:\00_TGC Project Files\NBR100\CAD\NBR100_GENERAL.dwg

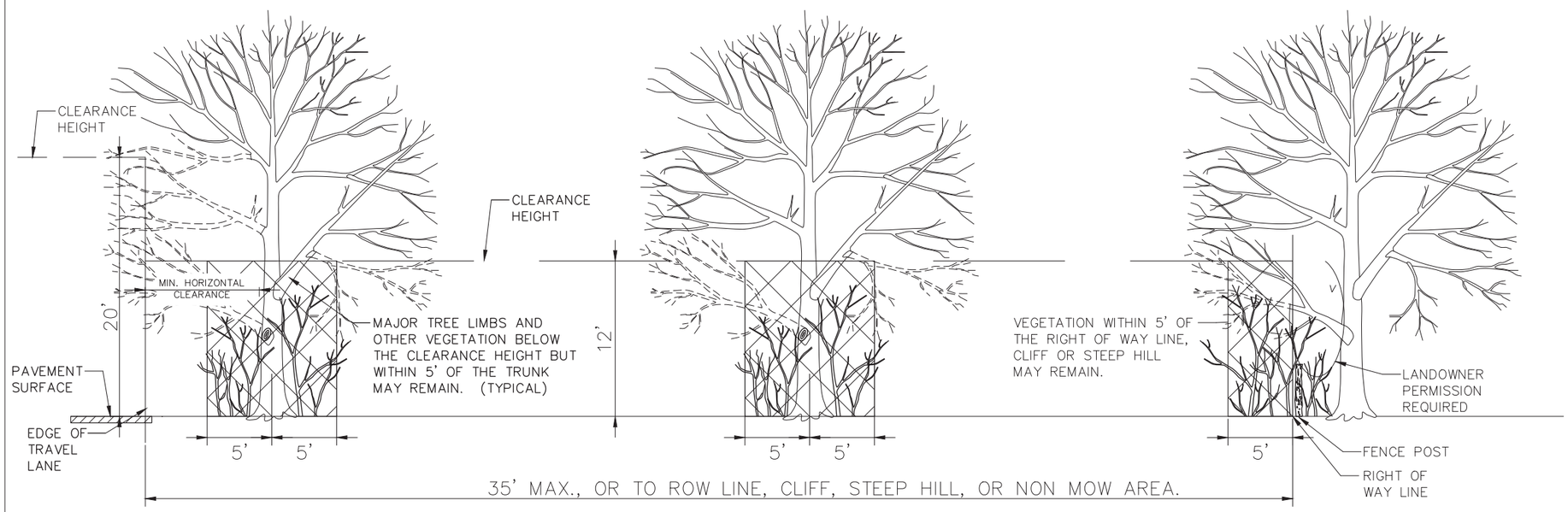

TREE PRUNING

A – STEP 1
CUT 1/3 WAY THROUGH BOTTOM OF LIMB 8–12" ABOVE MAIN STEM OR TRUNK

B – STEP 2
REMOVE LIMB 4–6" BEYOND THE FIRST CUT

C – STEP 3
REMOVE STUB WITH A SMOOTH CUT JUST BEYOND THE BRANCH COLLAR OF THE REMOVED LIMB.

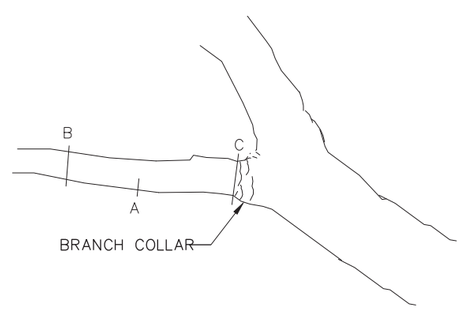

TREE LIMB

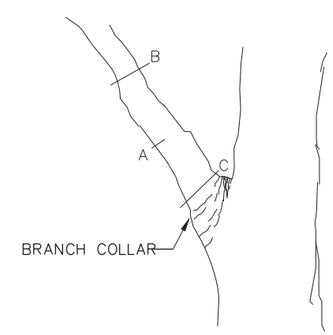

MAIN BRANCH

PRUNING CUTS – LIMBS 2" IN DIAMETER AND GREATER

TREE REMOVAL:

REMOVE ALL DEAD WOODY VEGETATION WITHIN THE ROW. CUT STUMPS FLUSH WITH THE GROUND.

TREE PRUNING:

THE OBJECTIVE OF TREE PRUNING IS FOR CROWN RAISING TO ALLOW CLEARANCE FOR MAINTENANCE VEHICLES.

WITH THE EXCEPTION OF WORK WITHIN OR ALONG A CHANNEL OR UNLESS OTHERWISE SHOWN ON THE PLANS, LIMIT WIDTH OF WORK TO 35' FROM THE EDGE OF THE TRAVEL LANE, OR TO ROW LINE, CLIFF, STEEP HILL, OR NON–MOW AREA, WHICHEVER IS LESS. THE ENGINEER WILL DEFINE CLIFFS, STEEP HILLS AND NON–MOW AREAS BASED ON FIELD CONDITIONS. THE ENGINEER MAY DEFINE AREAS TO RESTRICT OR INCREASE TREE PRUNING.

IF ANY TREES IN THE ROW ARE MARKED IN ANY WAY, VERIFY THE MEANING OF THE MARKINGS BEFORE BEGINNING PRUNING OPERATIONS.

WHEN PRUNING OAK TREES, DISINFECT TOOLS BEFORE MOVING FROM ONE TREE TO ANOTHER. USE 70% METHYL ALCOHOL, CHLORINE SOLUTION, OR OTHER APPROVED MATERIAL AS A DISINFECTANT.

TREAT ALL WOUNDS AND CUTS ON ALL OAK SPECIES WITH A COMMERCIAL TREE WOUND DRESSING WITHIN 20 MINUTES OF CREATING THE WOUND.

FLAILING EQUIPMENT IS NOT ALLOWED FOR THIS WORK.

REPAIR DAMAGE TO A PRIVATE FENCE OR OTHER PRIVATE PROPERTY AT CONTRACTOR EXPENSE.

PERFORM TREE PRUNING WITHIN ROW LIMITS. IF POSSIBLE, OBTAIN LANDOWNER PERMISSION AND MAKE PROPER PRUNING CUTS NECESSARY TO MAINTAIN THE HEALTH OF THE TREE.

CUT LIMBS AT A MAJOR FORK IN THE BRANCH OR, IF THE ENTIRE BRANCH IS ENCROACHING INTO THE AREA TO BE CLEARED, REMOVE THE BRANCH AT THE TRUNK.

DO NOT LEAVE A STUB BEYOND THE BRANCH COLLAR OR CUT THROUGH THE BRANCH COLLAR WHEN MAKING PRUNING CUTS. THE BRANCH COLLAR IS GENERALLY VISIBLE, BUT IF IT IS NOT, MAKE THE FINAL CUT APPROXIMATELY 1/2" FROM THE PARENT BRANCH OR TRUNK, PERPENDICULAR TO THE BRANCH OR LIMB BEING REMOVED.

THIS WORK AND ALL ASSOCIATED MATERIALS WILL NOT BE PAID FOR DIRECTLY, BUT WILL BE SUBSIDIARY TO ITEM 100 – PREPARING RIGHT OF WAY.

NOT TO SCALE

© 2018
Texas Department of Transportation
San Antonio District

TREE PRUNING AND REMOVAL

San Antonio District Standard

T:Engdata/Standards/SATreePruning&Removal.dgn
ORIGINAL DRAWING DATE: 12–18–18
REVISIONS
– –
– –
– –
– –

PREPARED BY AND FOR USE OF TxDoT.

STATE DISTRICT	FEDERAL REGION	FEDERAL AID PROJECT				SHEET
SAT	6					97 OF 97
COUNTY		CONTROL	SECTION	JOB	HIGHWAY	
COMAL		0915	17	076	COMMON ST	

2/8/2024
W:\00_TGC Project Files\NBR100\CAD\NBR100_GENERAL.dwg